RX

2-STROKE
300



Rideability

Beta motorcycles

2022
OWNERS MANUAL

BETAUSA.COM

RX 300 2T

Thanks for you preference, and have a good time! This handbook contains the information you need to properly operate and maintain your motorcycle.

The data, specifications and images shown in this manual does not constitute an engagement on the part of BETAMOTOR S.p.A. BETAMOTOR reserves the right to make any changes and improvements to its models at any moment and without notice.

Cod. 040.44.016.83.00

USA

IMPORTANT

We recommend you to check all the tightenings after the first one or two hours' ride over rough ground. Special attention should be paid to the following parts:

- rear sprocket
- ensure that the footrests are properly fixed
- front/rear brake levers/calipers/discs
- check that the plastics are properly fastened
- engine bolts
- shock absorber bolts/swingarm
- wheel hubs/spokes
- rear frame
- pipe connections
- tensioning the chain

IMPORTANT

In the event of interventions on the vehicle, contact Betamotor after-sales service.

CONTENTS

Operating instructions 5
Symbols 5
Riding safety 6

CHAPTER 1 GENERAL INFORMATION 7
Vehicle identification data 8
Tools kit 8
Familiarizing with the vehicle 9
Specifications 10
Fuses 16
Recommended lubricants and liquid 16

CHAPTER 2 OPERATION 17
Main parts 18
Checks before and after use 22
Breaking in 22
Refuelling 23
Starting the engine 24
Engine shut-down 24

CHAPTER 3 ADJUSTMENTS 25
Key to symbols 26
Brakes 26
Clutch 27
Adjustment of gas clearance 27
Adjusting the idle speed 27
Exhaust valve control adjustment 30
Handlebar adjustment 30
Shock absorber 32
Adjusting fork 32

CHAPTER 4 CHECKS AND MAINTENANCE 35
Key to symbols 36
Engine oil 36
Liquid coolant 38
Air filter 40
Spark plug 43
Carburettor 44
Front brake 46

USA

CONTENTS

Rear brake 49
Clutch control 52
Check and adjusting of steering play 54
Fork 55
Front wheel 55
Tyres 56
Rear suspension leverage 56
Chain 57
Battery 59
Fuses 61
Cleaning the vehicle 62
Prolonged inactivity 63
Scheduled maintenance vehicle 64
Tightening torque overview 66

CHAPTER 5 REMOVING AND INSTALLING SUPERSTRUCTURES 67
Removing and installing of the saddle 68
Removing and installing air filter side panel 69
Removing and installing of the complete tank 69

CHAPTER 6 TROUBLESHOOTING 73
Troubleshooting 74

USA

OPERATING INSTRUCTIONS

• To protect your safety and that of others, always drive carefully and with your helmet.
• Do not start the engine in closed places.

WARNING
Any modifications and tampering with the vehicle during the warranty period exempt the manufacturer from all responsibility and invalidate warranty.

SYMBOLS


SAFETY/ATTENTION
Failure to respect information marked with this symbol can entail a personal hazard.


INTEGRITY OF THE VEHICLE
Failure to respect information marked with this symbol can entail serious damage to the vehicle and termination of the warranty.


FLAMMABLE LIQUID HAZARD


Read the use and maintenance manual carefully.


MANDATORY TO WEAR PROTECTIVE CLOTHING
Use of the vehicle is subject to wearing specific protective clothing and safety footwear.


PROTECTIVE GLOVES MANDATORY
To perform the operations described, it is mandatory to wear protective gloves.


FORBIDDEN TO USE NAKED FLAMES OR POSSIBLE UNCONTROLLED IGNITION SOURCES


NO SMOKING


DO NOT USE MOBILE PHONE


CORROSIVE SUBSTANCES HAZARD
Liquids marked with this symbol are highly corrosive: handle with care


POISONING HAZARD

USA

RIDING SAFETY

- Ride only on track, on-road use is not allowed.
- Always wear approved personal protective equipment.
- Always keep the crash helmet visor clean.
- Do not keep sharp or brittle objects in your pockets while riding.
- Never ride abreast with other vehicles.
- Do not tow and avoid being towed by other vehicles.
- Always keep a safe distance from other vehicles.
- Do not start off while the vehicle is on its stand.
- Avoid swaying and wheelies as they are extremely dangerous for your own and other people's safety as well as for your vehicle.
- Always apply both brakes on dry roads with no gravel and sand. Using one brake may be dangerous and cause uncontrolled skidding.
- To reduce the braking distance, always apply both brakes.
- On wet roads and in off-road riding, drive with care and at moderate speed. Take special care in applying the brakes.

CHAPTER 1 GENERAL INFORMATION

CONTENTS

Vehicle identification data 8
- Frame identification 8
- Engine identification 8

Tools kit 8
Familiarizing with the vehicle 9
- Main parts: 9

Specifications 10
- Weight 10
- Dimensions 10
- Tyres 10
- Capacities 11
- Front suspension 11
- Rear suspension 11
- Engine 12
- Front brake 12
- Rear brake 12
- Electrical diagram RX 300 14
- Legend electrical diagram 15

Fuses 16
Recommended lubricants and liquid 16

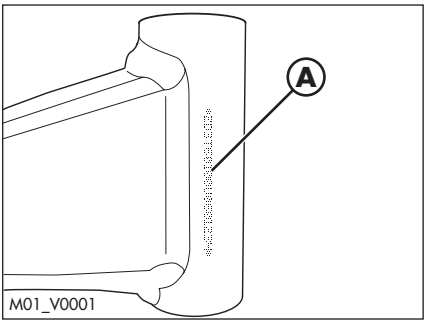

VEHICLE IDENTIFICATION DATA

FRAME IDENTIFICATION

Frame identification data **A** are stamped on the right side of the steering head tube.

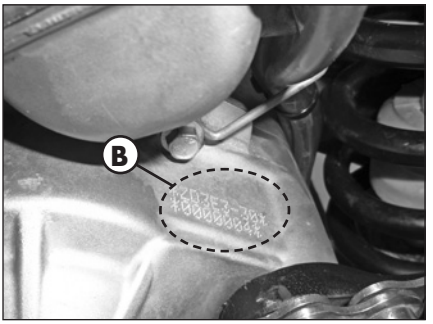

ENGINE IDENTIFICATION

Engine identification data **B** are stamped in the area shown in the figure.



TOOLS KIT

The following items are supplied as standard: operation, maintenance manual, tool kit and the cable adapter to connect the CAN socket to a scantool.

FAMILIARIZING WITH THE VEHICLE

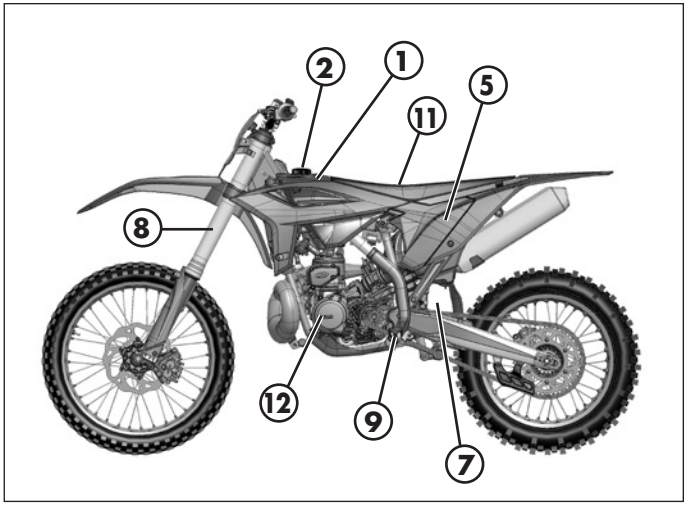

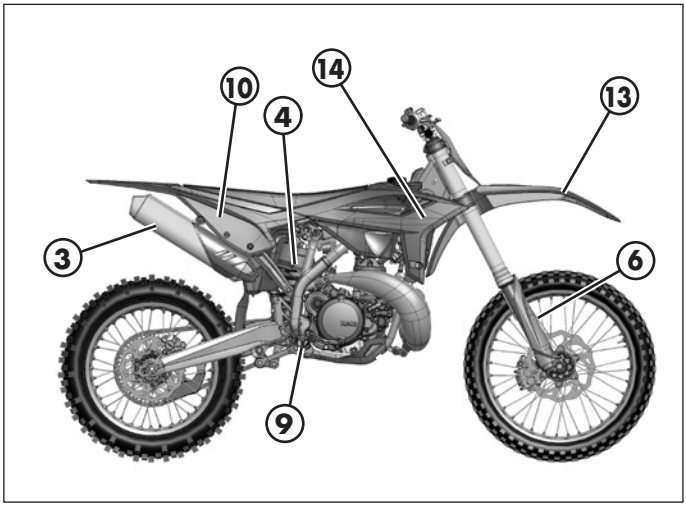

MAIN PARTS:

1 - Fuel tank
2 - Tank cap
3 - Silencer
4 - Rear shock absorber
5 - Side panel air filter cover
6 - Fork covers
7 - Side stand
8 - Fork
9 - Rider's footrests
10 - Rear side panel
11 - Saddle
12 - Engine
13 - Front mudguard
14 - Front side panel

SPECIFICATIONS

WEIGHT

Weight in running order without fuel and optionals:
RX 300 ..... 99,7kg (front 47,7kg; rear 51kg)

DIMENSIONS

Version	RX 300
Maximum length (with plate holder) [mm]	2180
Maximum width [mm]	825
Overall height [mm]	1280
Wheelbase [mm]	1490
Saddle height [mm]	970
Ground clearance [mm]	350
Footrest height [mm]	430

FRAME ..... molybdenum steel with double cradle split above exhaust port

TYRES

Version	Dimensions		Pressure [Bar]	
	Front tyre	Rear tyre	Front tyre	Rear tyre
RX 300	90/90-21	120/80-19	1	1

front rim ..... 21x1,6 - 36 holes
rear rim ..... 19x1,85 - 36 holes

CAPACITIES

Version	RX 300
Fuel tank * [l]	9,5
Coolant circuit [ml]	1300
Gear oil [ml] (following normal maintenance work)	800
Gear oil [ml] (following a complete engine review)	850

* Such data is referred to a conditioned and arranged tank

FRONT SUSPENSION

Closed cartridge hydraulic upside-down fork (Ø48 mm shafts)

Version	RX 300
Spring (K - [N/mm])	4,5
Oil type	KHL 15-11
Oil quantity # [g]	525
Wheel stroke [mm]	310
Compression clicks (from completely closed)	8
Rebound clicks (from completely open)	12

For a completely dry fork

REAR SUSPENSION

Single shock absorber with compound lever

Version	RX 300
Spring (K - [daN/mm])	5,2
Static sag load - SAG [mm]	38
Shock absorber travel [mm]	135
Wheel stroke [mm]	305
Compression clicks, high speeds (from completely closed)	20
Compression clicks, low speeds (from completely closed)	22
Rebound clicks (from completely closed)	15

FRONT BRAKE

Ø 260 mm disc and dual-piston floating caliper

REAR BRAKE

Ø240 mm disc and single-piston floating caliper

ENGINE

Version	RX 300
Type	Single-cylinder, 2-stroke, liquid cooled and electric start
Bore x stroke [mm]	72 x 72
Displacement [cm^3]	293,1
Compression ratio	11,4:1

Fuel system..... carburetor

Carburetor

Version	RX 300
Main jet	172
Slow jet	40
Start jet	85
Needle	N1EG
Needle position (from top)	3°
Air screw turns (from all closed)	1+ $^1/_2$

Cooling system ..... forced liquid circulation by pump

Spark plug

Version	RX 300
Type	NGK BR8ECM

Clutch..... wet, multidisc

Gearchange

Version	RX 300
Primary drive	27/72
Gear ratio 1st gear	12/31
Gear ratio 2nd gear	15/28
Gear ratio 3rd gear	19/28
Gear ratio 4th gear	20/24
Gear ratio 5th gear	27/27
Gear ratio 6th gear	28/24
Final drive	14/48

Exhaust valve.....centrifugal operation with reaction springs

Ignition ..... CDI without trembler, with digital variable spark advance

Starting..... electric starter

ELECTRICAL DIAGRAM RX 300

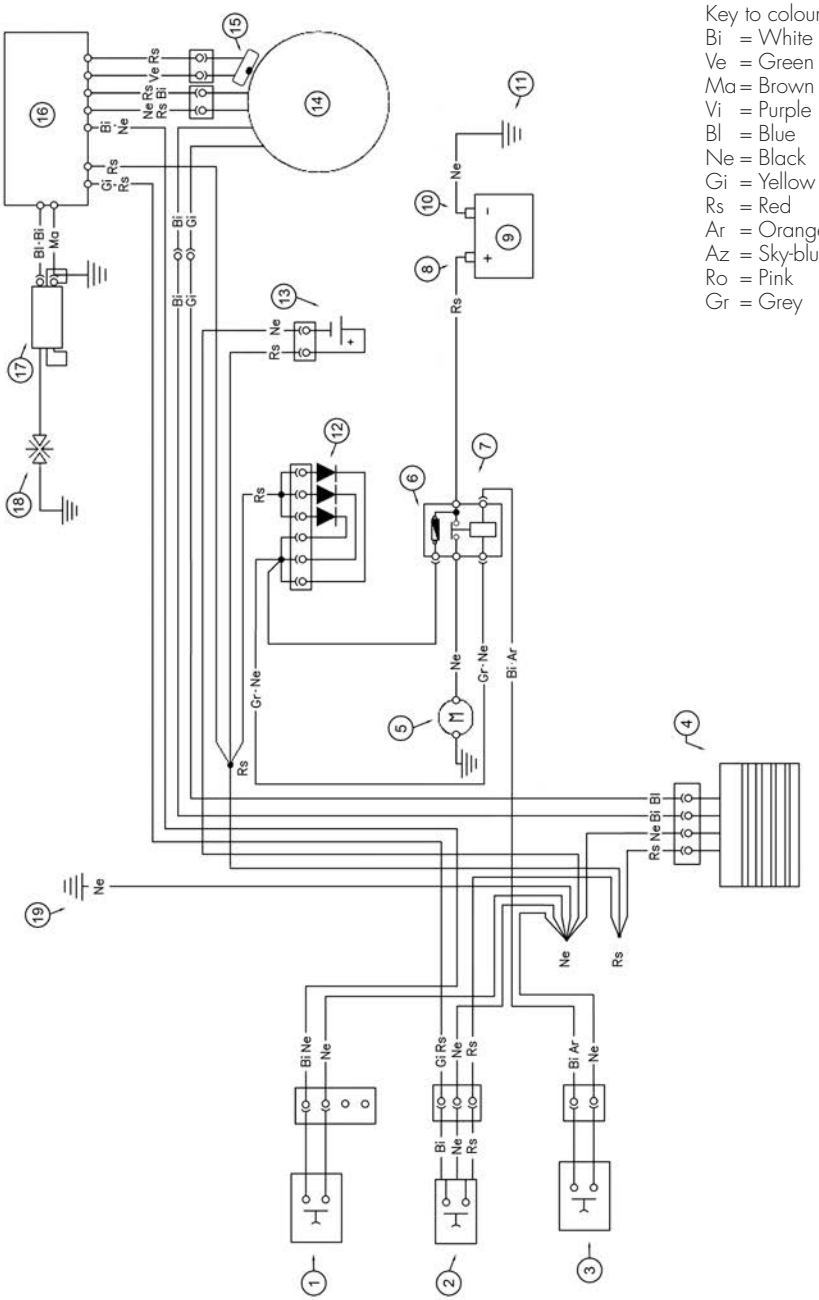

LEGEND ELECTRICAL DIAGRAM

1) ENGINE STOP BUTTON
2) SECOND MAP SWITCH
3) START BUTTON
4) VOLTAGE REGULATOR
5) STARTER MOTOR
6) 10A FUSE
7) STARTER RELAY
8) BATTERY POSITIVE TERMINAL
9) LITHIUM 12V 2AH BATTERY
10) BATTERY NEGATIVE TERMINAL
11) FRAME EARTH WIRE
12) DIODES GROUP
13) CONDENSATOR 4700 μF
14) GENERATOR
15) PICK-UP SENSOR
16) ELECTRONIC CONTROL UNIT
17) IGNITION COIL
18) SPARK PLUG
19) FRAME EARTH

1

FUSES

Two, one of them spare 10A

RECOMMENDED LUBRICANTS AND LIQUID

To maximize the vehicle's performance and ensure many years of trouble-free operation, we recommend using the following products:

PRODUCT TYPE	SPECIFICATIONS
See Recommendations Below	
PREMIX OIL	MOTUL 800 2T
TRANSMISSION OIL	MOTUL TRANSOIL EXPERT 10W40
BRAKE FLUID	MOTUL RBF 600
AIR FILTER OIL / FILTER CLEANER	MOTUL AIR FILTER OIL / FILTER CLEAN
FORK OIL	MOTUL FACTORY LINE 5 WT.
GREASE	MOTUL TECH 300
COOLANT/ANTIFREEZE	MOTUL MOTOCOOL EXPERT

Note:
It is essential that all renewals should be performed with the products listed in the table above.

USA

CHAPTER 2 OPERATION

CONTENTS

Main parts 18
- Fuel tank cap 18
- Fuel cock 18
- Starter 18
- Clutch lever 19
- RH switch 19
- Front brake lever and gas control 20
- Gear change lever 20
- Brake pedal 20
- Kickstart - optional 20
- Side stand 21
- Keys 21
- Steering lock 21

Checks before and after use 22
Breaking in 22
Refuelling 23
Starting the engine 24
Engine shut-down 24

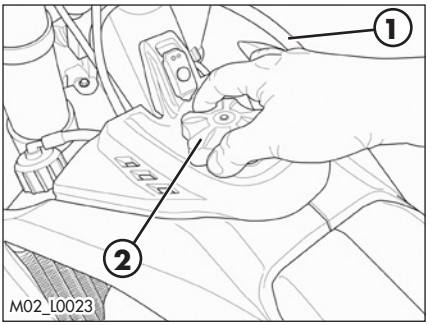

MAIN PARTS

FUEL TANK CAP

Use unleaded petrol (gasoline).

Disconnect the ventilation pipe **1**.
To open the tank turn the cap **2** anticlockwise.

To close the fuel tank's cap, set it on the tank and crew it clockwise.

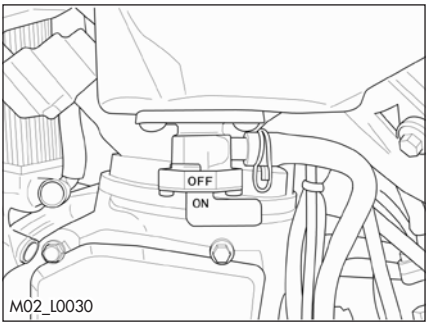

FUEL COCK

Fuel cock has two positions:

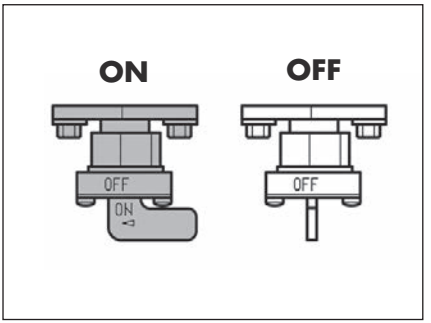

OFF: fuel supply closed. Fuel cannot pass from the tank to the carburettor.

ON: fuel supply enabled. Fuel flows from the tank to the carburettor. The tank empties until it reaches the reserve level.

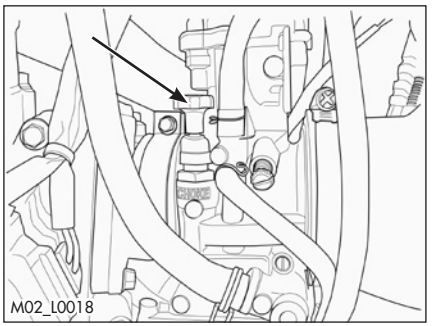

STARTER

The starter lever is located on the carburettor.

To operate the choke pull it upward.

CLUTCH LEVER

Clutch lever is fitted to the left-hand side of the handlebars.

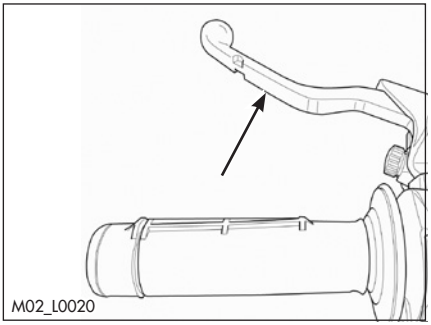

LH SWITCH

The button turns off the engine.

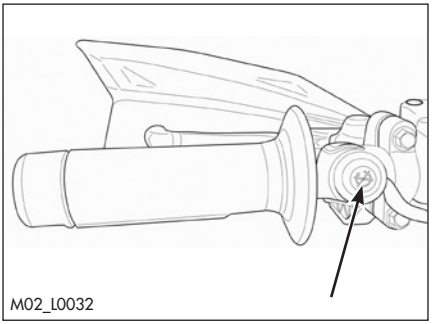

RH SWITCH

Starter button is located on the right-hand side of the handlebars and operate the electric engine starter. For startup, refer to page 24. Do not press the button while the engine is running.

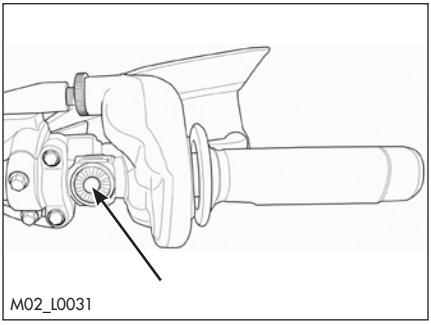

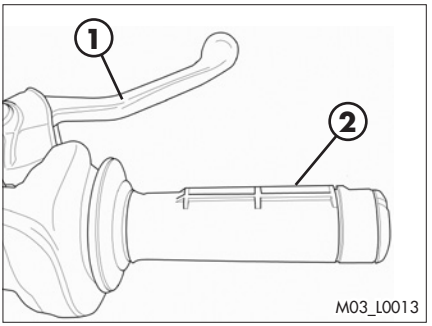

FRONT BRAKE LEVER AND GAS CONTROL

The front brake lever **1** and the gas throttle **2** are located on the right side of the handlebar.

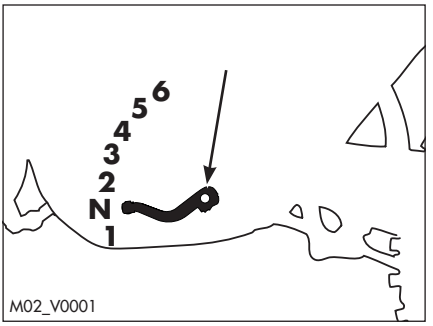

GEAR CHANGE LEVER

Gear change lever is fitted to the left side of the engine.
The positions corresponding to the different gears are shown in the figure.

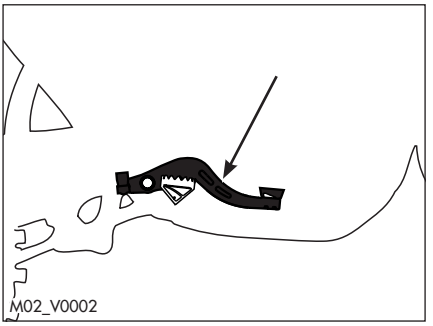

BRAKE PEDAL

Brake pedal is located in front of the right-hand footrest.

The rear brake is operated by pressing down the pedal.

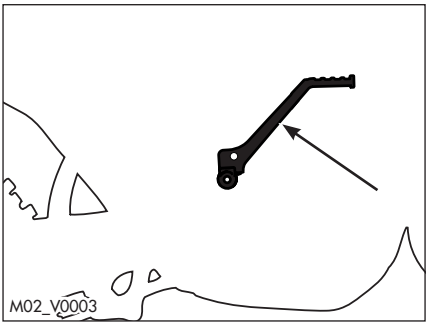

KICKSTART - OPTIONAL

Kickstart is fitted to the right-hand side of the engine.
The upper part of the kickstart can be oriented.

SIDE STAND

Press down side stand with the foot and lean the vehicle against it.
Ensure that the ground is solid and the vehicle stands steadily.

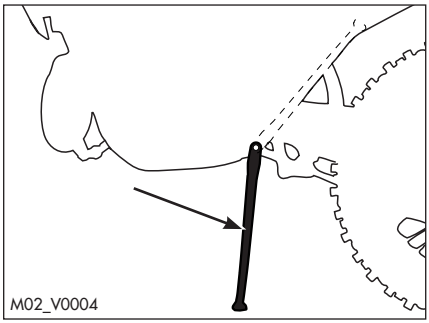

If the vehicle is used off-road, the closed stand can be further fastened by means of rubber band.

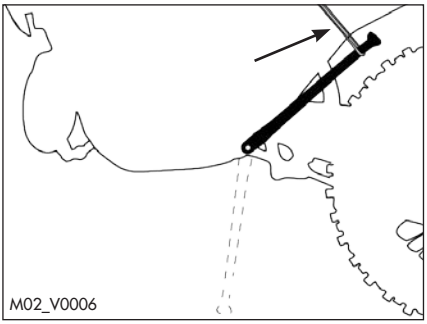

KEYS

The vehicle is supplied with two keys (one key and its spare).

STEERING LOCK

To activate the steering lock:
- turn the handlebar counter-clockwise;
- push the key and turn counter-clockwise;
Remove the key from this position.
To deactivate the steering lock:
- turn the key clockwise;
- turn the handlebar clockwise;
From this position, the handlebar is free to move, the key can be removed.

WARNING: do not keep the spare key inside the vehicle, but in a safe place.
We suggest you note the code number stamped on the keys. In this way you can obtain a duplicate.

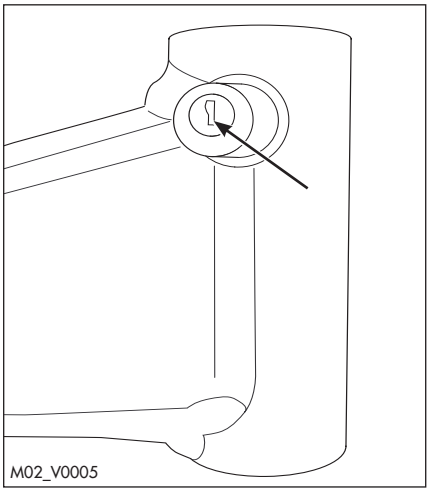

2 CHECKS BEFORE AND AFTER USE

For safe driving and long vehicle life you should:

1 Check all fluid levels.
2 Check the correct operation of the brakes and brake pad wear (page 48).
3 Check pressure, general condition and thickness of tread (page 56).
4 Check that the spokes are properly tightened.
5 Check the tensioning of the chain (page 55).
6 Check the adjustment and the operation of all the cable controls.
7 Inspect all the nuts and bolts.
8 Wash the motorcycle thoroughly after off-road use (page 62).

BREAKING IN

The running-in period lasts approximately 5 hours, during which it is advisable to:

1 Make the first refuelling with a mixture of:

RX 300
2,5%

2 Use the oil indicated on page 16 in the "Recommended lubricants and liquids" table.
3 During the first 3 hours of operation the engine should only be used to approximately 70 percent of its power. In addition, the engine speed should not exceed 11,000 rpm.
4 For the next 2 hours of operation the engine should only be used to about 90 percent of its power.
5 Use the vehicle after properly warming up the engine.
6 Avoid travelling at constant speed (changing the speed causes the different components to bed in evenly and more quickly).

This procedure should be followed each time piston, piston rings, cylinder, crankshaft or crankshaft bearings are replaced.

WARNING
Replace the transmission oil after the first 3 hours or after 15 l. of mixture.

REFUELLING

See page 16 for the fuel specifications.

Fuel tank capacity is show on page 11.

To refuel open the tank cap (page 20).

After refuelling, screw the cap back and tighten securely.

Mix the fuel with oil according to the percentages listed in the table. Use the oil indicated on page 16 in the "Recommended lubricants and liquids" table.

RX 300
2%

WARNING
The refuelling should be performed with the engine off.



WARNING:
Fire hazard. Fuel is highly flammable.



Always stop the engine when refuelling and keep open flames and lighted cigarettes away.



Do not top up fuel while using a mobile phone.

Refuel in an open well ventilated area.

Pay special attention so that the fuel does not come into contact with hot parts of the vehicle. Immediately clean up any spilled fuel.



WARNING: Risk of poisoning.

Fuel is poisonous liquid and a health hazard.



Fuel must not come into contact with the skin, eyes, and clothing. Do not breathe in the fuel vapours. If contact occurs with the eyes, rinse immediately with plenty of water and seek medical advice. If contact occurs with skin, immediately clean contaminated areas with soap and water If fuel is swallowed, contact a doctor immediately. Change clothing that is contaminated with fuel.

WARNING: Environmental pollution hazard.

The fuel must not contaminate the ground water, the ground, or the sewage system.

STARTING THE ENGINE

Move the fuel tank valve in ON position (page 18).

Check that the gears are in neutral (page 20).

Pull the clutch lever (page 19).

Close the side stand (page 21).

WHIT ELECTRIC STARTER:
Press the startup button for a max of 3 seconds (page 19). If the vehicle does not startup, wait 30 seconds before attempting a new startup.

NOTE
Pauses are needed to diffuse the generated heat and to avoid damaging the battery. If the battery is at a temperature below 15°C, the electric startup will be weak, not because the battery is deteriorated but because it needs to be warmed up. Therefore, with temperatures below 15°C, several startup attempts may be necessary to heat the battery and thereby increase the battery power provided by the battery.

Do not press the button while the engine is running.

COLD STARTING:
Operate the starter (page 18), start the vehicle as described above, wait a few seconds, then move the starter back to its starting position.

ENGINE SHUT-DOWN

To shut-down the engine press the button  on the right switch unit (page 19).

NOTE:
With the engine off, make sure the fuel cock is set to OFF (page 18).

CHAPTER 3 ADJUSTMENTS

3

CONTENTS

Key to symbols....26
Brakes....26
Front brake....26
Rear brake....26
Clutch....27
Adjustment of gas clearance....27
Adjusting the idle speed....27
Carburetor settings according to the working conditions....28
Exhaust valve control adjustment....30
Handlebar adjustment....30
U-bolt position adjustment....30
Adjustment of the handlebar position....31
Shock absorber....32
Adjusting the rebound damper....32
Adjusting fork....32
Adjusting the rebound damper....32
Adjusting the compression damper....32
Adjusting the hydraulic compression damper (high and low speeds)....33
Adjusting the spring preload....33
Static sag load test....34

KEY TO SYMBOLS

Tightening torque

Threadlocker Medium

Grease

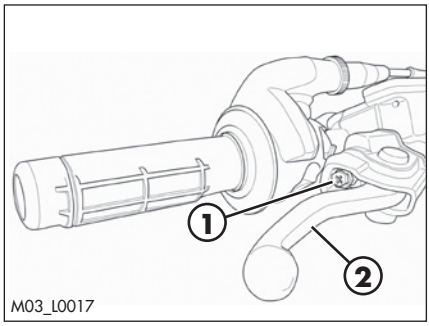

M03_L0017

BRAKES

FRONT BRAKE

The front brake is disk type with hydraulic control.

The home position of brake lever **2** can be adjusted by means of screw **1**.

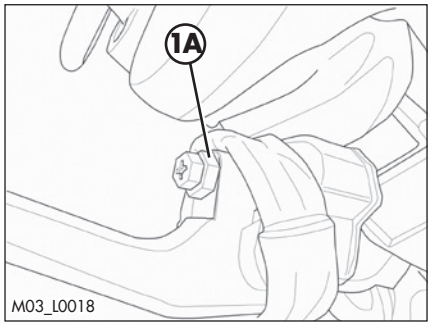

M03_L0018

Warning! Once the adjustment has been made, tighten the locknut **1A**.

Warning! Do not remove the locknut for any reason **1A**.

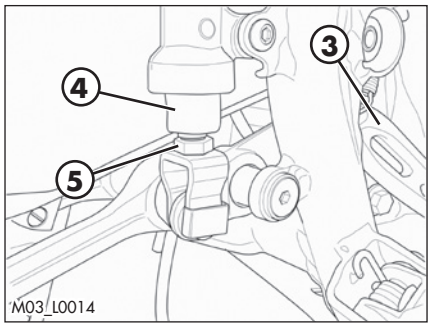

M03_L0014

REAR BRAKE

The home position of brake pedal **3** can be altered by turning adjusting screw **5** after loosening the locknut located under dust cap **4**. Loosen the locknut and turn the adjusting screw until the desired height is obtained. Retighten the locknut after completing the operation.

CLUTCH

The adjustment screw **1** allows adjustment of the distance of lever **2** from the knob. The empty run is recovered automatically.

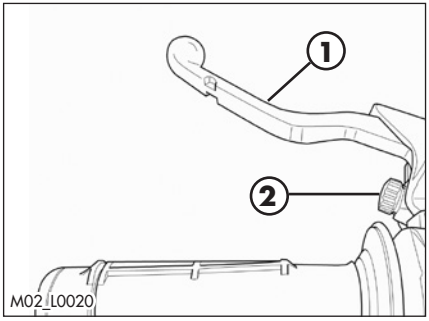

ADJUSTMENT OF GAS CLEARANCE

The throttle control cable should always have a 3-5 mm of clearance. In addition, the idle speed should not change when the handlebar is fully rotated to the left or right. Push back protective cap **1**. Loosen counternut **2** and turn adjusting screw **3**. Tighten the locknut and check that the throttle twist grip turns smoothly.

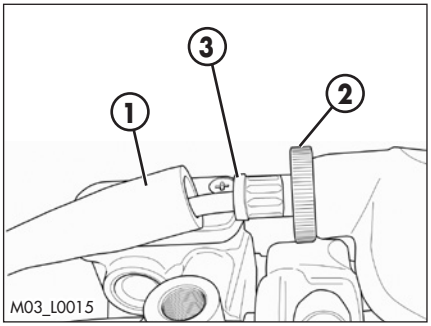

ADJUSTING THE IDLE SPEED

Idling adjustment greatly affects the appropriate start-up and the accelerator response.
Idling is adjusted through adjustment screw **1** and air adjustment screw **2**. Adjustment screw **1** adjusts the basis position of the gas valve. Turn the screw clockwise to increase the rotation conditions and counterclockwise to diminish it. The air adjustment screw **2** adjusts the quantity of which is mixed to the fuel for idling. If the screw is turned counterclockwise, the quantity of air increases (thin mix), if turned clockwise, the quantity of air diminishes (fat mix).

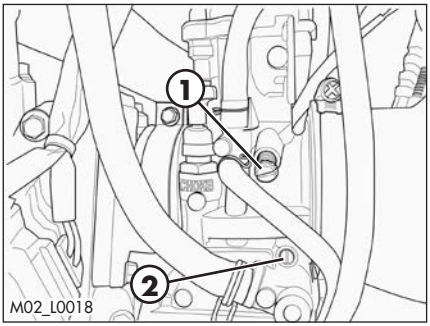

To properly adjust the idle speed, follow these steps:

• Tighten the air adjustment screw no. **2** fully and then loosen it up to the value described in the carburetor setting table (page 12).

• Warm the engine for approx. 5 minutes, until the operational temperature is attained.

• Slowly turn the air adjustment screw **2** clockwise, until idling starts diminishing.

• Mark the position, then slowly turn the air adjustment screw no. **2** counterclockwise, until idling decreases again.

• Adjust the screw between these two positions, at the highest idling point..

If a remarkable increase in the rpm occurred during the adjustment above, idling is to be reduced and taken back to the normal level, and then execute the above procedure.

If no satisfactory results are obtained after the procedure, this may be due to an incorrect slow-running jet.

If the air adjustment screw has been thoroughly tightened, but the rpm have not varied, a lower size slow-running jet is to be used.

Execute the adjustment procedure again after replacing the jet.

NOTE:
The correct idling should be between 1800 and 1900 rpm.

CARBURETOR SETTINGS ACCORDING TO THE WORKING CONDITIONS

See the following tables to adjust the carburetor settings according to ambient temperature and altitude.

Legend:

SLM	Above sea level
AVA	Air screw opening (from all closed)
Gm	Pilot jet
SPL	Needle
POS	Clip position (from top)
GM	Main jet
VLV	Valve

Standard settings

Version RX 300 carb. PWK 38S							
Altitude (SLM)	Carburetor setting	Ambient temperature					
		-20°C÷ ÷-7°C	-6°C÷ 5°C	6°C ÷ 15°C	16°C ÷ 24°C	25°C ÷ 36°C	37°C ÷ 49°C
		-2°F ÷ 20°F	19°F ÷ 41°F	42°F ÷ 60°F	61°F ÷ 78°F	79°F ÷ 98°F	99°F ÷ 120°F
3000 m	AVA	1,5	2	2	2,5	2,5	
10000 ft	Gm	40	40	40	38	38	
⬆	GM	172	170	168	165	162	
	SPL	N1EG	N1EH	N1EH	N1EI	N1EI	
2301 m	POS	3	3	3	2	2	
7501 ft	VLV	6,5	6,5	6,5	6,5	6,5	
2300 m	AVA	1,5	1,5	2	2	2,5	2,5
7500 ft	Gm	40	40	40	40	38	38
⬆	GM	175	172	170	168	165	162
	SPL	N1EG	N1EG	N1EH	N1EH	N1EI	N1EI
1501 m	POS	3	3	3	3	2	2
5001 ft	VLV	6,5	6,5	6,5	6,5	6,5	6,5
1500 m	AVA	1,5	1,5	1,5	2	2	2,5
5000 ft	Gm	40	40	40	40	40	38
⬆	GM	178	175	172	170	168	165
	SPL	N1EF	N1EG	N1EG	N1EH	N1EH	N1EI
751 m	POS	4	3	3	3	3	2
2501 ft	VLV	6,5	6,5	6,5	6,5	6,5	6,5
750 m	AVA	1,5	1,5	1,5	1,5	2	2
2500 ft	Gm	42	40	40	40	40	40
⬆	GM	180	178	175	172	170	168
	SPL	N1EF	N1EF	N1EG	N1EG	N1EH	N1EH
301 m	POS	5	4	3	3	3	3
1001 ft	VLV	6,5	6,5	6,5	6,5	6,5	6,5
300 m	AVA	1	1,5	1,5	1,5	1,5	2
1000 ft	Gm	42	42	40	40	40	40
⬆	GM	182	180	178	175	172	170
	SPL	N1EE	N1EF	N1EF	N1EG	N1EG	N1EH
0 m	POS	5	5	4	3	3	3
0 ft	VLV	6,5	6,5	6,5	6,5	6,5	6,5

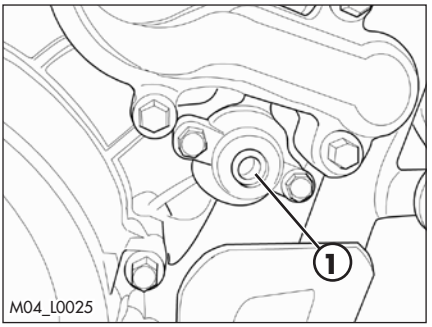

EXHAUST VALVE CONTROL ADJUSTMENT

ATTENTION! The vehicle is provided with an exhaust valve whose fine tuning is performed during the final try-out of the engine. The position of adjustment valve **1** must not be modified for any reason.

For any adjusting, please contact Betamotor's Authorized Service Network.

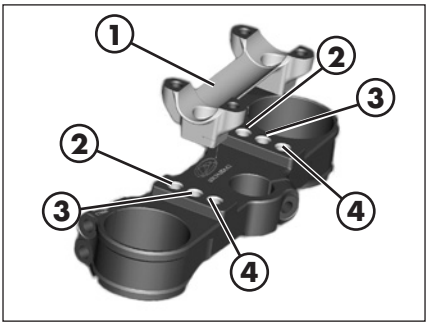

HANDLEBAR ADJUSTMENT

U-BOLT POSITION ADJUSTMENT

The lower bracket **1** can be mounted in correspondence of the holes nr. **2**, **3** or **4** respectively.

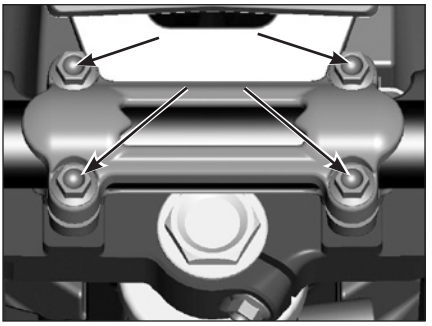

To adjust the position of the u-bolt remove the screws shown in the figure.

Remove the handlebar.

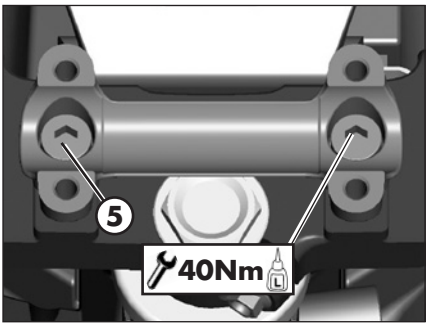

Remove the screws **5**.

Position the U-bolt according to requirements.

At the end refit the screws **5** after the application of thread lock fluid and tighten to the torque indicated.

Apply the handlebar.

Apply the top u-bolt.

Refit the screws **6**. Tighten to the torque indicated.

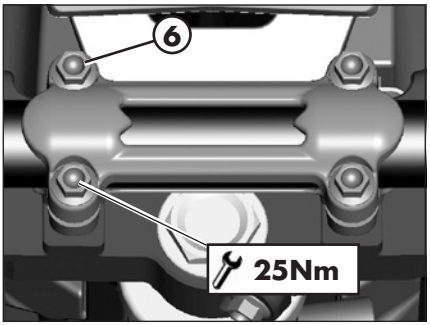

ADJUSTMENT OF THE HANDLEBAR POSITION

The handlebar can be adjusted by rotating it back and forth.

To adjust the handlebar loosen screws **1**.

Position the handlebar according to requirements.

Tighten to the torque indicated.

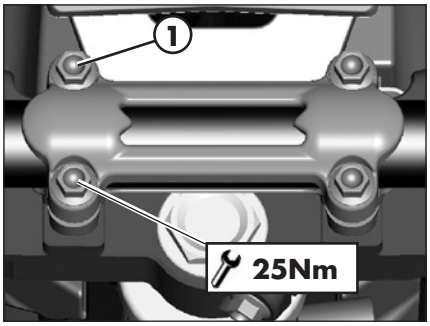

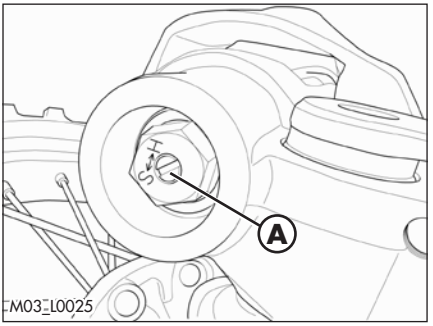

ADJUSTING FORK

ADJUSTING THE REBOUND DAMPER

Extension adjuster **A** manages the fork return speed after each compression. The adjuster closes by moving the control towards the **H sign**, thus increasing the braking effect; the adjuster opens by moving the control towards the **S sign**, thus decreasing the braking effect.

For standard calibration, refer to page 11.

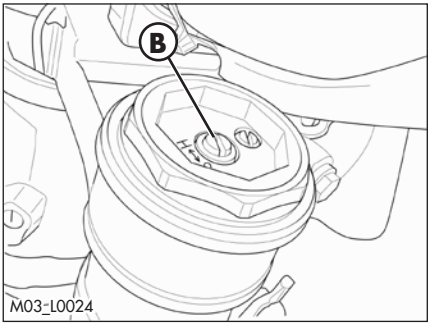

ADJUSTING THE COMPRESSION DAMPER

Hydraulic compression adjuster **B** is used to manage the ability of the fork to absorb a shock. The adjuster closes by moving the control towards the **H sign**, thus increasing the braking effect; the adjuster opens by moving the control towards the **S sign**, thus decreasing the braking effect.

For standard calibration, refer to page 11.

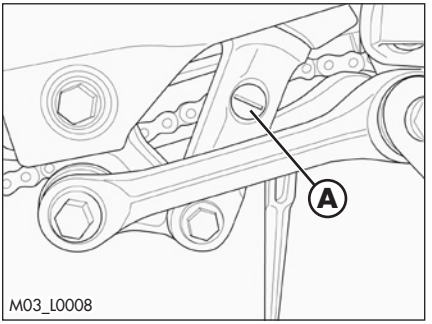

SHOCK ABSORBER

ADJUSTING THE REBOUND DAMPER

Turn screw **A** to adjust the hydraulic rebound damper.

Turning the screw anticlockwise (out) decreases the damping effect.

For standard setting, refer to page 11.

ADJUSTING THE HYDRAULIC COMPRESSION DAMPER (HIGH AND LOW SPEEDS)

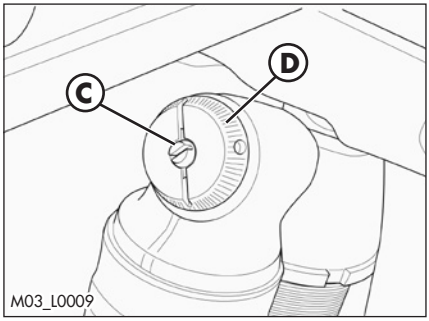

Adjustment for low compression speed:
- Using a screwdriver, loosen screw **C** by turning it clockwise to increase the hydraulic compression damper.

For standard setting, refer to page 11.

Adjustment for high compression speed:
- Turn knob **D** anticlockwise to decrease the hydraulic compression damper.

For standard setting, refer to page 11.

WARNING:
Starting from the standard position, turn the knob anticlockwise (with a closing action), the center screw will have an integral movement, then will rotate with the knob.

For standard setting, refer to page 11.

ADJUSTING THE SPRING PRELOAD

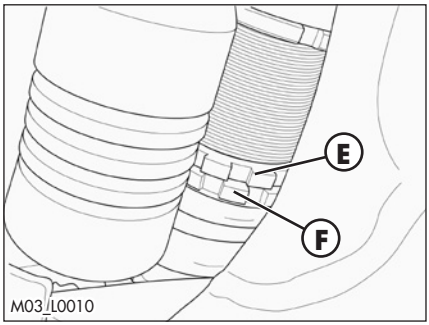

Loosen counter-ring **E**, rotate ring **F** clockwise to increase the spring preload (and consequently the shock absorber preload) or anticlockwise to decrease it. After obtaining the desired preload, turn counter-ring **E** until it stops against adjusting ring **F**.

For standard setting, refer to page 11.

NOTE: for the handling of ring nuts use the specific wrench provided in the standard tool kit shown in the figure.



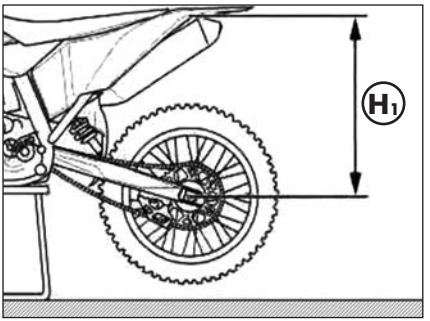

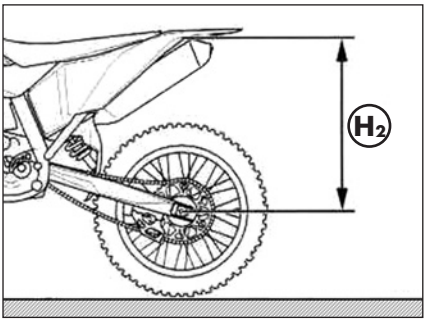

STATIC SAG LOAD TEST

To verify the static sag of the shock absorber proceed as follows:

- Place the motorcycle on the work stand.
- Measure the vertical distance between the rear wheel axle and a reference point on the rear fairings.
- Write down the dimension H_1.
- Remove the work stand.
- Keep the motorcycle in vertical position and measure again the distance between the wheel axle and the reference point previously established.
- Write down the dimension H_2.

Verify that the value of the static compression $X = H_1 - H_2$ matches the one shown on page 11. Otherwise, perform the adjustment of the spring preload as described above.

MAP SWITCH INSTRUCTIONS



This model features a MAP switch which offers two different engine settings.

The "Rain" setting is used in conditions where traction is minimal. This setting softens the engines power delivery.

The "Sun" setting is used for all other conditions where traction is normal to excellent. This setting increases the engines power throughout the range.

This switch can be changed with the engine running.

CHAPTER 4 CHECKS AND MAINTENANCE

4

CONTENTS

Key to symbols....36
Engine oil....36
- Check the level....36
- Replacement....37

Liquid coolant....38
- Check the level....38
- Replacement....39

Air filter....40
- Removing and installing air filter....40
- Air filter cleaning....41

Spark plug....43
Carburettor....44
- Draining the carburettor float chamber....44
- Checking the float level....45

Front brake....46
- Check the level of the front brake fluid....46
- Restoring the level of the front brake fluid....46
- Bleeding the front brake....47
- Front brake lining control....48
- Brake disc thickness control....48

Rear brake....49
- Check the level of the rear brake fluid....49
- Restoring the level of the rear brake fluid....49
- Bleeding the rear brake....50
- Rear brake lining control....51
- Brake disc thickness control....51

Clutch control....52
- Check the level....52
- Bleeding....53

Check and adjusting of steering play....54
Fork....55
Front wheel....55
- Tightening....55

Tyres....56
Rear suspension leverage....56
Chain....57
- Check and adjust tightening chain....57
- Check for chain wear....58

Battery....59
- Battery removal....59
- Inactivity....60
- Battery assembly....60
- Charging the battery....61

Fuses....61
Cleaning the vehicle....62
- General precautions....62

Prolonged inactivity....63
Scheduled maintenance vehicle....64
Tightening torque overview....66

USA

KEY TO SYMBOLS

Tightening torque

Threadlocker Medium

Grease

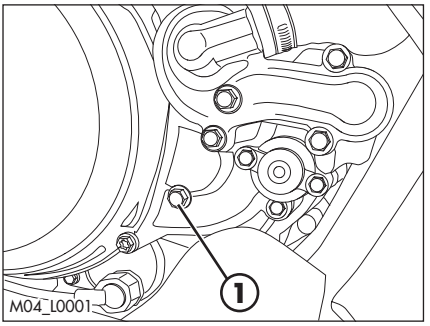

ENGINE OIL

CHECK THE LEVEL

Hold the vehicle upright.
Position the drive on a flat base ensuring stability.

Remove the inspection cap **1**.

The oil level must arrive to the lower edge of check hole.

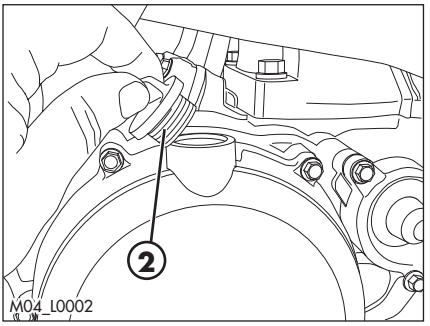

Otherwise restore the oil level through plug **2**.

WARNING
The inspection cap is ONLY to check the oil level. For the oil drain, refer to the paragraph "REPLACEMENT" on page 37.

Use the oil indicated on page 16 in the "Recommended lubricants and liquids" table.

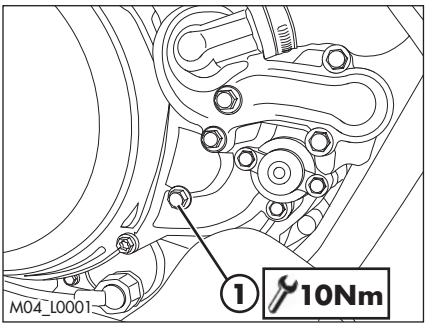

REPLACEMENT

Always perform the replacement when engine is hot:
- Position the drive on a flat base ensuring stability.
- Place a container under the engine.

WARNING:
Hot oil can cause severe burns!
Screw on filler cap **1** again.

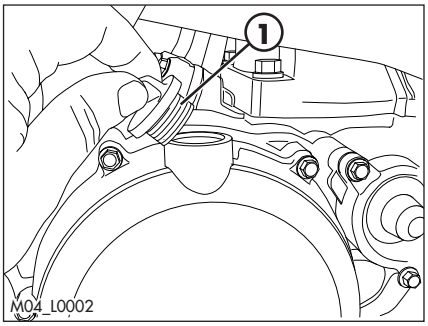

- Unscrew filler plug **1** and drain plug **2**.
- Drain all the oil from the crankcase.
- Place the cap **2** and tighten to specified torque.

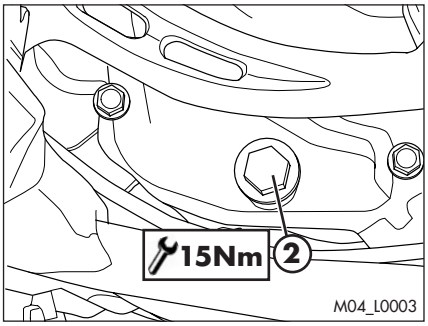

Pour in the quantity of liquid indicated on page 11.
Use the oil indicated on page 16 in the "Recommended lubricants and liquids" table.

Screw on filler cap **1** again.

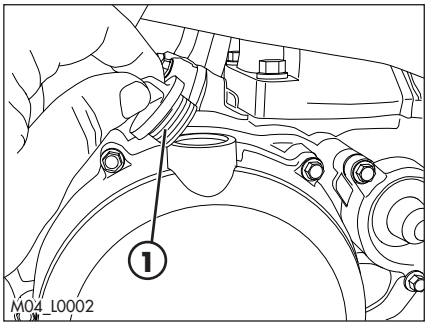

WARNING:
Dispose of used oil in compliance with the regulations in force.

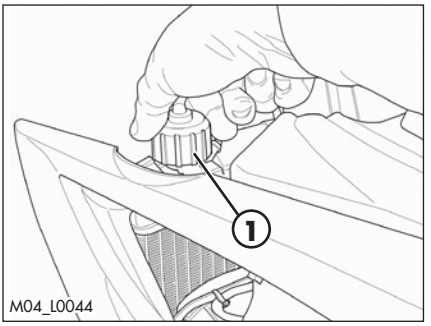

LIQUID COOLANT

CHECK THE LEVEL

WARNING: Never unscrew the filler cap of the radiator when the engine is hot. Danger of burning!

Keep the vehicle in vertical position relative to the ground.

The level of the coolant must be checked when the engine is cold. Use the following procedure:

- Unscrew cap **1** and ensure that the liquid is visible in the lower portion of the loading tube.
- In the case in which the liquid is not visible proceed topping up.
- At the end of operation refit the filler cap.

Use the liquid coolant indicated on page 16 in the "Recommended lubricants and liquids" table.

WARNING: Never unscrew the filler cap of the radiator when the engine is hot. Danger of burning!

WARNING:
Wear appropriate protective clothing and protection gloves.

Keep coolant out of reach of children.

Avoid any direct contact of the coolant with skin, eyes or clothing. If this happens:

- with the eyes, rinse immediately with plenty of water and seek medical advice;
- with skin, Immediately clean contaminated areas with soap and water Change clothing that is contaminated with coolant.

If coolant is swallowed, contact a doctor immediately.

REPLACEMENT

Keep the vehicle in vertical position relative to the ground.

Replacement of the coolant must take place when the engine is cold.

- Unscrew cap **1**.

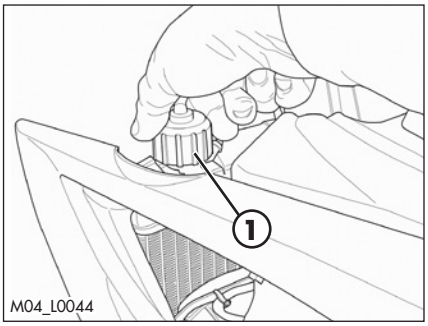

- Place a container under screw **2**.

- Unscrew the screw **2**.

- Drain the liquid.

- Tighten screw **2** applying the specific washer.

- Proceed to filling.

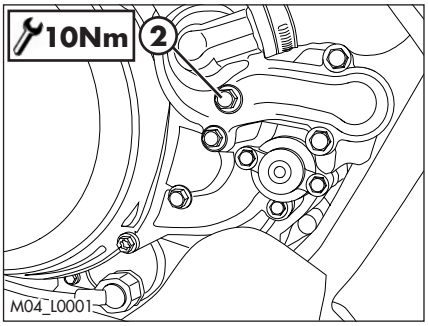

The amounts of liquid are shown on page 11.

Use the liquid indicated on page 16 in the "Recommended lubricants and liquids" table.

WARNING:
Never unscrew the filler cap of the radiator when the engine is hot. Danger of burning!

WARNING:
Wear appropriate protective clothing and protection gloves.

Keep coolant out of reach of children.

Avoid any direct contact of the coolant with skin, eyes or clothing. If this happens:

- with the eyes, rinse immediately with plenty of water and seek medical advice;
- with skin, Immediately clean contaminated areas with soap and water Change clothing that is contaminated with coolant.

If coolant is swallowed, contact a doctor immediately.

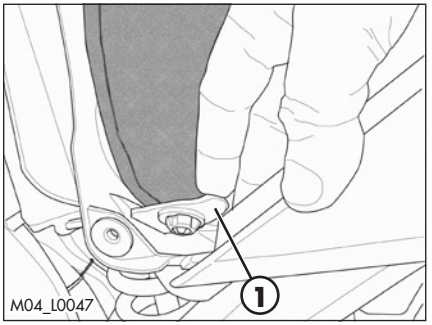

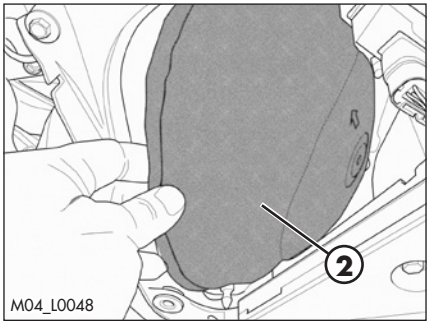

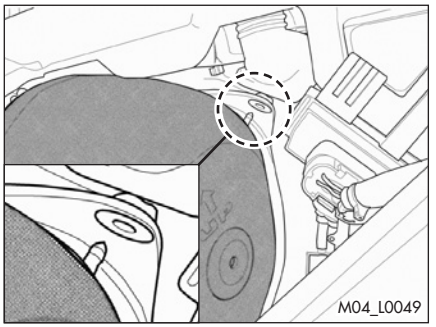

AIR FILTER

Check after every ride.

REMOVING AND INSTALLING AIR FILTER

To access the filter is necessary:
•Remove the air filter cover (page 69).

•Release filter fastener **1**.

•Pull out air filter **2**.

Reassemble by performing the operations in reverse order.

WARNING:
After every intervention, check that nothing has been left inside the filter box.

WARNING!
When re-inserting the filter, be careful that the pin on the filter cage is properly engaged into the specific housing.

NOTE:
If the filter is damaged, replace it immediately.
To replace, contact authorised Beta-motor customer service.

WARNING:
Never use the vehicle if the air filter is not in place. The infiltration of dust and dirt can cause damage and considerable wear.

WARNING:
After every intervention, check that nothing has been left inside the filter box.

AIR FILTER CLEANING

- Thoroughly wash the filter with water and soap.
- Dry the filter.
- Wet the filter with filter oil and then remove the excess oil to prevent it from dripping.

Apply the sponge filter element to the cage with care:

- to make to correspond the sign UP of the filter with that indicated by the cage.

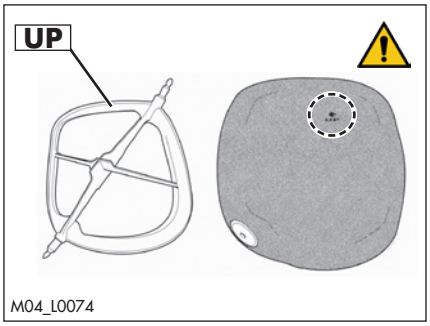

M04_L0074

- To completely insert the rungs **3** of the cage into the filter seats.

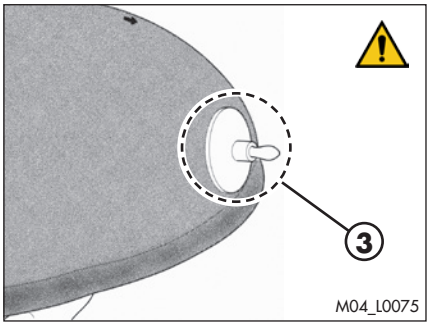

M04_L0075

- To hook the inside edges of the filter with the correspondents grafts **4** found on the cage.

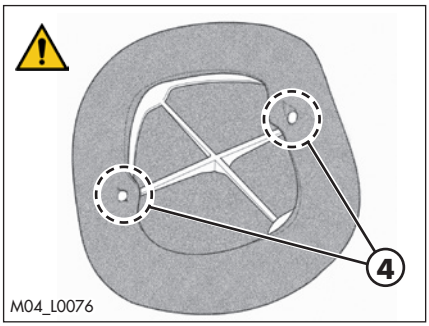

M04_L0076

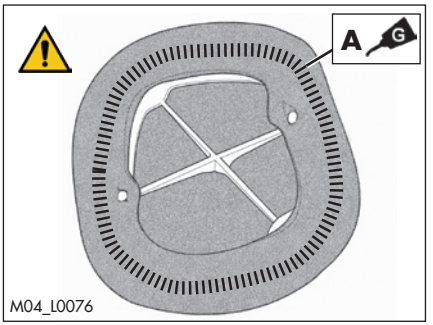

Note: before refitting the filter to the vehicle is recommended to apply a long-term grease in the area **A**.

SPARK PLUG

Keeping the spark plug in good condition will reduce fuel consumption and increase engine performance.

To accede to spark plug, is necessary to take off the fuel tank with side fairings (page 69).

To perform the check, just extract the spark plug cap and unscrew the spark plug by means of the provided wrench.
Carefully clean the electrodes using a wire brush. Blow the spark plug with compressed air to prevent any residues from getting into the engine.

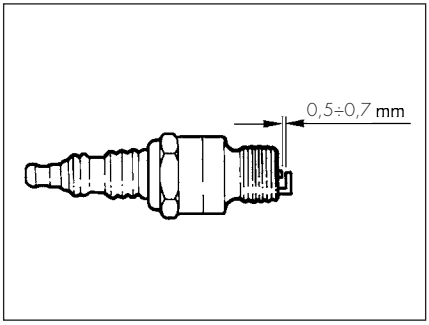

Examine the distance between the electrodes with a feeler. This distance should be from 0,5 - 0,7 mm. If it is not, it may be corrected by bending the earth electrode.

The spark plug may appear:

black ■ "fat" carburation

light brown ■ appropriate carburation

white □ "thin" carburation

Check as well that there are no cracks in the insulation or corroded electrodes. If so, replace immediately.
Lubricate the spark plug thread, and then (when the engine is cold) screw in the spark plug by hand to its abutting end. Finally tighten the spark plug with the spanner.

WARNING:
Do not check while the engine is hot.

CARBURETTOR

DRAINING THE CARBURETTOR FLOAT CHAMBER

If the carburettor tank needs to be emptied, proceed as described.

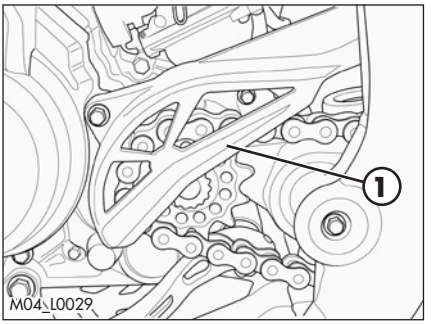

Remove the chain protection **1**, close the tank tap and put a cloth under the carburettor, so that you can collect the running out fuel.

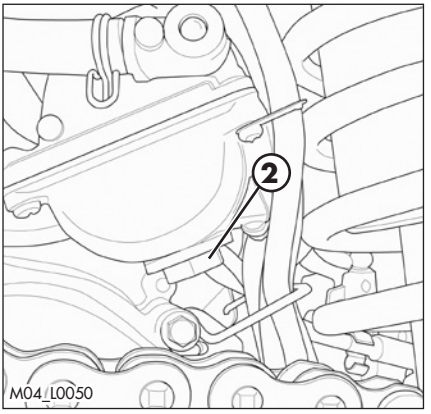

Open the drain screw **2** to drain the fuel.
Close the drain screw.
Apply the chain protection and tighten the screws at 10Nm.

WARNING:
Follow action on a cold engine.

WARNING:
Fire hazard. Fuel is highly flammable.

Always stop the engine when refuelling and keep open flames and lighted cigarettes away.

Refuel in an open well ventilated area.

Immediately clean up any spilled fuel.

WARNING:
Risk of poisoning!
Fuel is poisonous liquid and a health hazard.
Wear appropriate protective clothing and protection gloves.

Fuel must not come into contact with the skin, eyes, and clothing. Do not breathe in the fuel vapours. If contact occurs with the eyes, rinse immediately with plenty of water and seek medical advice. If contact occurs with skin, immediately clean contaminated areas with soap and water If fuel is swallowed, contact a doctor immediately. Change clothing that is contaminated with fuel.

WARNING:
Environmental pollution hazard!
The fuel must not contaminate the ground water, the ground, or the sewage system.

CHECKING THE FLOAT LEVEL

Remove the carburettor from the vehicle after following the procedure for emptying the carburettor bowl (page 44).

Remove the float chamber.

Keep the carburettor on a 60° approx. inclined, so that float leans on the needle valve without pressing it.
In this position the edge of the float should be at the specified height (see image).
If the float height does not correspond to the nominal value, check the float needle valve and if necessary replace it.
If the needle valve is in working order, adjust the float height by bending float lever **1**.
Assemble the carburettor tank, assemble the carburettor and check idling.

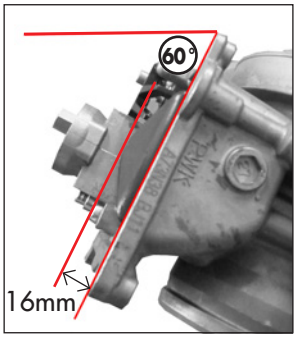

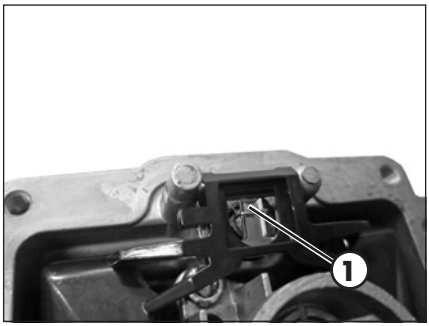

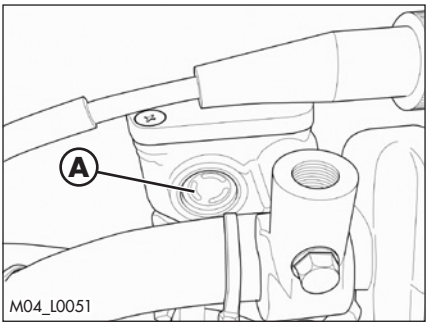

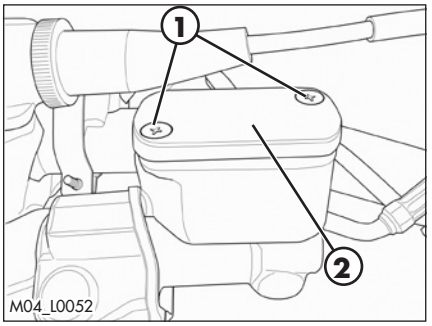

FRONT BRAKE

CHECK THE LEVEL OF THE FRONT BRAKE FLUID

Check the level of the brake fluid through sight **A**. The level of the fluid should never fall below the mark in the sight.

RESTORING THE LEVEL OF THE FRONT BRAKE FLUID

To restore the level of the brake fluid, loosen the two screws **1**, lift cap **2** and add brake fluid until its level is 5 mm below the upper rim of the reservoir.

Use the liquid indicated on page 16 in the "Recommended lubricants and liquids" table.

WARNING:
The clutch fluid is extremely corrosive. Take care not to spill it on the paintwork.

Wear appropriate protective clothing and protection gloves.

Keep coolant out of reach of children.

WARNING: Avoid any direct contact of the liquid with skin, eyes or clothing. If this happens:

- with the eyes, rinse immediately with plenty of water and seek medical advice.
- with skin, immediately clean contaminated areas with soap and water. Change clothing that is contaminated with liquid.

If liquid is swallowed, contact a doctor immediately.

BLEEDING THE FRONT BRAKE

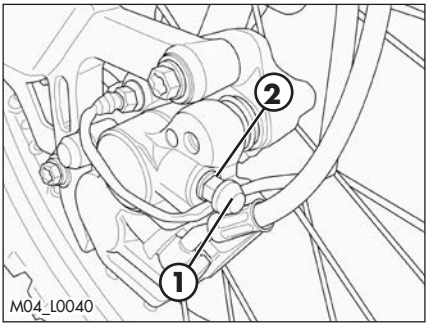

To bleed air from the front brake circuit, proceed as follows:

- Remove the rubber cap **1** from the valve **2**.
- Open the sump cap.
- Place one end of a small transparent tube into the valve **2**, and the other end inside a container.
- Pump with the brake lever 2/3 times and keep the lever pressed.
- Unscrew the valve and let the oil drain.
- If are still visible in the tube repeat above operation until obtaining a continuous outflow of oil within no air bubbles.
- Close the valve and release the lever.

NOTE:
during this procedure, continuously top up the brake pump thank to replace the oil that is out flowing.

- Remove the tube.
- Replace the rubber cap.
- Close the oil reservoir cap.

Use the liquid indicated on page 16 in the "Recommended lubricants and liquids" table.

WARNING:
The brake fluid is extremely corrosive. Take care not to spill it on the paintwork.

Wear appropriate protective clothing and protection gloves.

Keep coolant out of reach of children.

WARNING: Avoid any direct contact of the liquid with skin, eyes or clothing. If this happens:

- with the eyes, rinse immediately with plenty of water and seek medical advice.
- with skin, immediately clean contaminated areas with soap and water. Change clothing that is contaminated with liquid.

If liquid is swallowed, contact a doctor immediately.

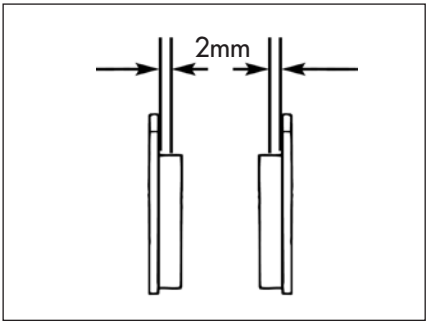

FRONT BRAKE LINING CONTROL

In order to verify the wear condition of front brake is enough to view the caliper from the bottom, where is possible to glimpse the brake lining tails which will have to show a brake of 2 mm in thickness. If the stratum is lesser let's start replacing them.

Note:
Perform the check according to the times shown in the table on page 64.

To replace, contact authorised Betamotor customer service.

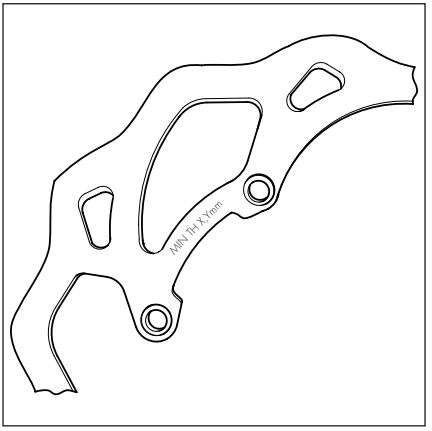

BRAKE DISC THICKNESS CONTROL

Periodically verify disc condition. In case signs of damage , veins, or deformations are present, proceed with replacement.
Verify disc thickness. The minimum thickness is engraved on the disc.
Once the limit is in proximity or has been reached, proceed with brake disc replacement.
For replacement, contact an authorised Betamotor after-sales service centre.

REAR BRAKE

CHECK THE LEVEL OF THE REAR BRAKE FLUID

Check the level of the brake fluid through sight **A**. The level of the fluid should never fall below the mark in the sight.

RESTORING THE LEVEL OF THE REAR BRAKE FLUID

To restore the oil level, top up by means of oil filler cap **1**.

Use the liquid indicated on a page 16 in the "Recommended lubricants and liquids" table.

WARNING:
The brake fluid is extremely corrosive. Take care not to spill it on the paintwork.

Wear appropriate protective clothing and protection gloves.

Keep coolant out of reach of children.

WARNING: Avoid any direct contact of the liquid with skin, eyes or clothing. If this happens:

- with the eyes, rinse immediately with plenty of water and seek medical advice.
- with skin, immediately clean contaminated areas with soap and water. Change clothing that is contaminated with liquid.

If liquid is swallowed, contact a doctor immediately.

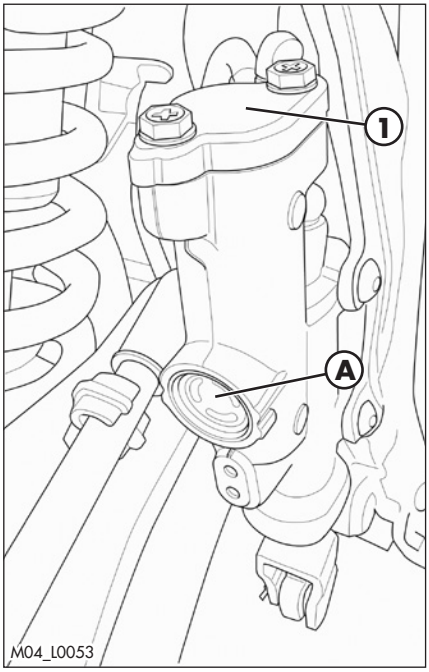

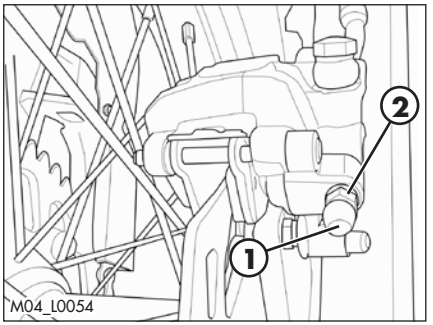

BLEEDING THE REAR BRAKE

To bleed air from the rear brake circuit, proceed as follows:

- Remove the rubber cap **1** from the valve **2**.
- Open the sump cap.
- Place one end of a small transparent tube into the valve **2**, and the other end inside a container.
- Pump with the brake lever 2/3 times and keep the pedal pressed.
- Unscrew the valve and let the oil drain.
- If are still visible in the tube repeat above operation until obtaining a continuous outflow of oil within no air bubbles.
- Close the valve and release the lever.

NOTE:
During this procedure, continuously top up the brake pump thank to replace the oil that is out flowing.

- Remove the tube.
- Replace the rubber cap.
- Close the oil reservoir cap.

Use the liquid indicated on page 16 in the "Recommended lubricants and liquids" table.

WARNING:
The brake fluid is extremely corrosive. Take care not to spill it on the paintwork.

Wear appropriate protective clothing and protection gloves.

Keep coolant out of reach of children.

WARNING: Avoid any direct contact of the liquid with skin, eyes or clothing. If this happens:

- with the eyes, rinse immediately with plenty of water and seek medical advice.
- with skin, immediately clean contaminated areas with soap and water. Change clothing that is contaminated with liquid.

If liquid is swallowed, contact a doctor immediately.

REAR BRAKE LINING CONTROL

In order to verify the wear condition of rear brake is enough to view the caliper from above, where is possible to glimpse the brake lining tails which will have to show a brake of 2 mm in thickness. If the stratum is lesser let's start replacing them.

Note:
Perform the check according to the times shown in the table on page 64.

To replace, contact authorised Betamotor customer service.

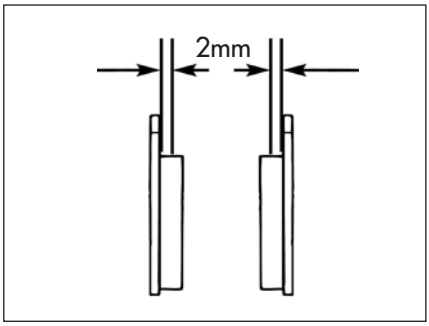

BRAKE DISC THICKNESS CONTROL

Periodically verify disc condition. In case signs of damage , veins, or deformations are present, proceed with replacement.
Verify disc thickness. The minimum thickness is engraved on the disc.
Once the limit is in proximity or has been reached, proceed with brake disc replacement.
For replacement, contact an authorised Betamotor after-sales service centre.

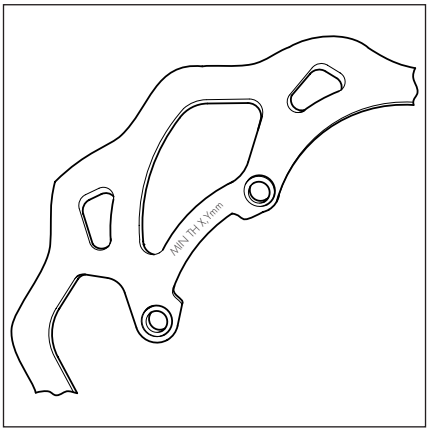

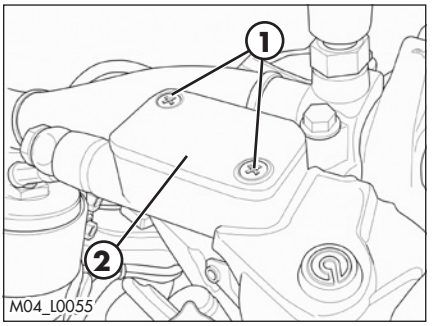

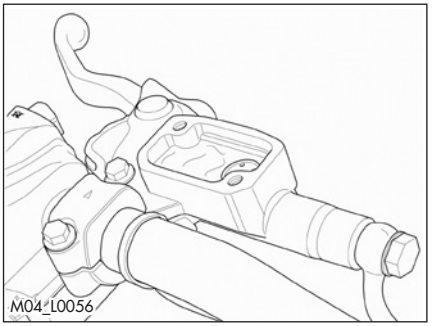

CLUTCH CONTROL

CHECK THE LEVEL

To check the oil level in the clutch pump, first remove cover **2**.
Remove the two screws **1** and take off cover **1** together with the rubber bellows.
With the clutch pump in a horizontal position, the level of the oil should be 5 mm below the upper rim.
In the case where the level is lower than specified top up.

Use the liquid indicated on page 16 in the "Recommended lubricants and liquids" table.

WARNING:
The clutch fluid is extremely corrosive. Take care not to spill it on the paintwork.

Wear appropriate protective clothing and protection gloves.

Keep coolant out of reach of children

WARNING: Avoid any direct contact of the liquid with skin, eyes or clothing. If this happens:

- with the eyes, rinse immediately with plenty of water and seek medical advice.
- with skin, immediately clean contaminated areas with soap and water. Change clothing that is contaminated with liquid.

If liquid is swallowed, contact a doctor immediately.

BLEEDING

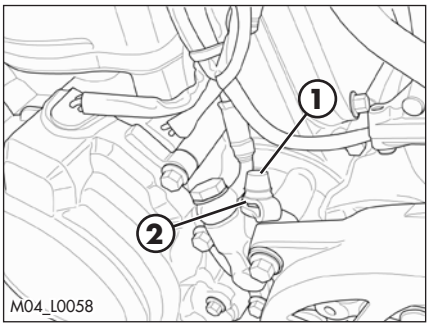

To bleed air from the clutch pump, proceed as follows:
- Remove the rubber cap **1** from the valve **2**.
- Open the sump cap.
- Place one end of a small transparent tube into the valve **2**, and the other end inside a container.
- Pump with the clutch lever 2/3 times and keep the lever pressed.
- Unscrew the valve and let the oil drain.
- If are still visible in the tube repeat above operation until obtaining a continuous outflow of oil within no air bubbles.
- Close the valve and release the lever.

NOTE:
During this procedure, continuously top up the pump tank to replace the liquid that is out flowing.
- Remove the tube.
- Replace the rubber cap.

Use the liquid indicated on page 16 in the "Recommended lubricants and liquids" table.

WARNING:
The clutch fluid is extremely corrosive. Take care not to spill it on the paintwork.

Wear appropriate protective clothing and protection gloves.

Keep coolant out of reach of children.

WARNING: Avoid any direct contact of the liquid with skin, eyes or clothing. If this happens:
- with the eyes, rinse immediately with plenty of water and seek medical advice.
- with skin, immediately clean contaminated areas with soap and water. Change clothing that is contaminated with liquid.

If liquid is swallowed, contact a doctor immediately.

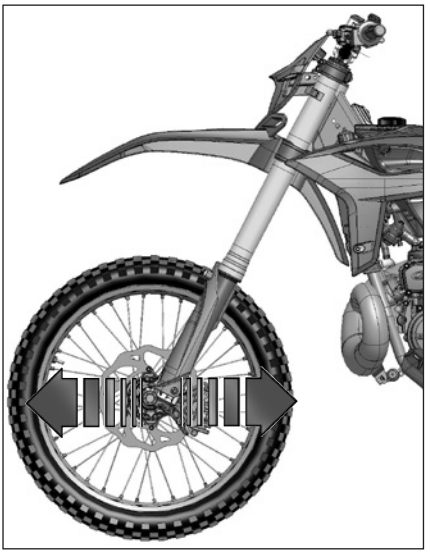

CHECK AND ADJUSTING OF STEERING PLAY

Periodically check the play in the steering sleeve by moving the fork back and forth as shown in the figure. Whenever you feel clearance, adjust as described below:

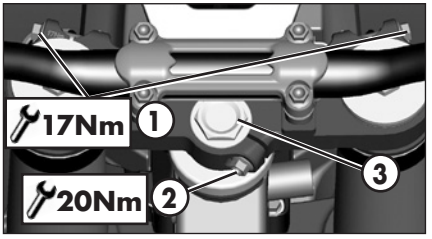

- Loosen the screws **1**
- Loosen the screw **2**
- Reduce the play by turning nut **3**

Tighten the screws to the prescribed torque values.

WARNING:
Tightening of the screws should be carried out by adjusting the torque wrench to the stability torque with repeated tightening until stability torque has been achieved.

FORK

To maintenance refer at an authorized service centre Betamotor.

To check the tightening torques see as shown in the figure.

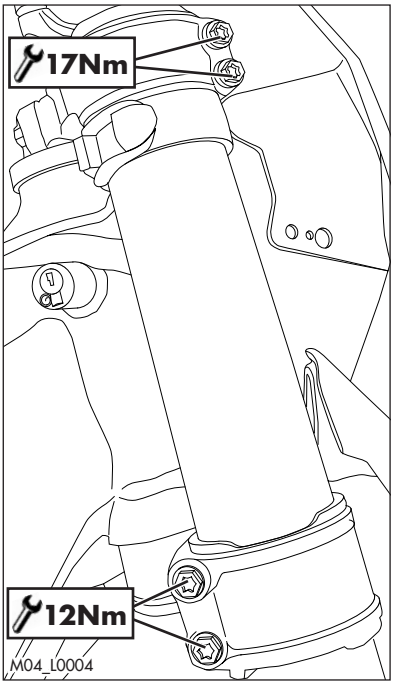

WARNING:
Tightening of the screws should be carried out by adjusting the torque wrench to the stability torque with repeated tightening until stability torque has been achieved.

FRONT WHEEL

TIGHTENING

Following removal of the wheel:

compress and release the fork 3-4 times.

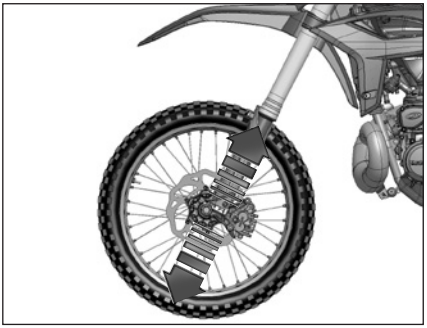

Tighten the wheel bolt and the screws of the foot-leg.

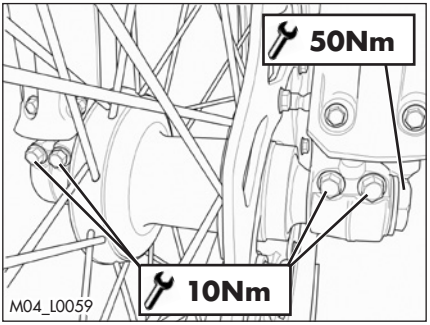

WARNING:
Tightening of the screws should be carried out by adjusting the torque wrench to the stability torque with repeated tightening until stability torque has been achieved.

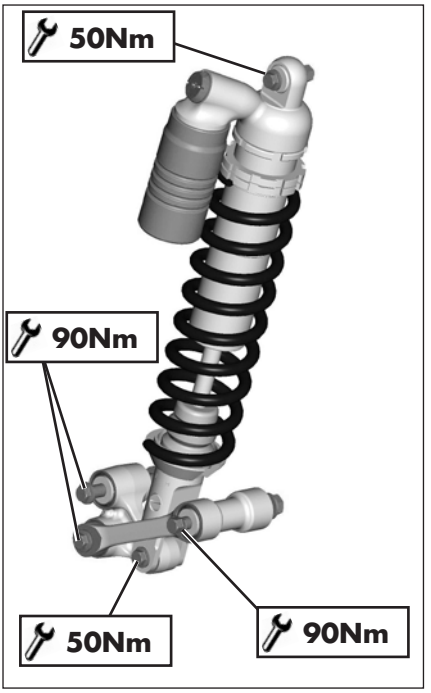

REAR SUSPENSION LEVERAGE

In order to guarantee optimal operation and duration over time of the progressive leverage of the rear suspension, it is recommended to periodically check correct tightness of nuts and bolts.

Verify that suspension nuts and bolts are at the indicated torque.

TYRES

Only fit tyres approved by BETAMOTOR.
Unsuitable tyres can adversely affect the road holding of the vehicle.

- To protect your safety, immediately replace any damaged tyres.
- Slick tyres adversely affect the road holding of the vehicle, especially on wet roads and in off-road riding.
- Insufficient pressure results in abnormal wear and overheating of the tyres.
- The front and rear tyres must have the same tread design.
- Always measure the inflating pressures when the tyres are cold.
- Keep the tyre pressures within the prescribed range.

CHAIN

Checking the drive chain periodically to ensure longer chain life. Always keep it lubricated and clean of deposited dirt.

Take special care in preventing the lubricant from coming into contact with the rear tyre or brake disc, otherwise the tyre grip and the action of the brake would be greatly reduced, making it very difficult to control the vehicle.

CHECK AND ADJUST TIGHTENING CHAIN

Hold the vehicle upright on the ground on a flat base ensuring stability.

The chain clearance must comply with the measure indicated. Tension the chain if the clearance exceeds the indicated value.

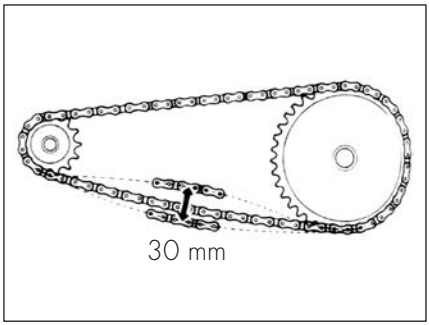

- Loosen the pin **1**.

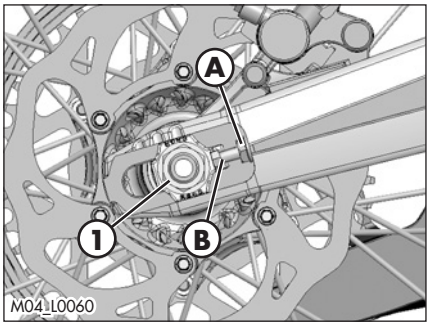

- Loosen counternuts **A** on either side of the fork.
- Turn adjusting screws **B** on either side until the desired chain tension is obtained.
- Tighten counternuts **A** on either side of the fork.

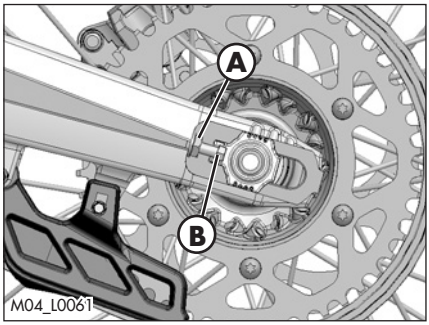

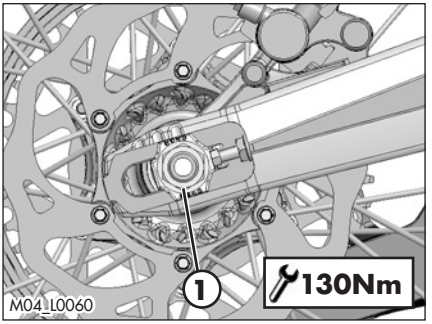

• Tighten the pin **1** to the torque indicated.

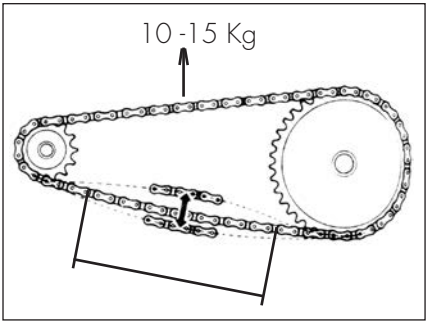

CHECK FOR CHAIN WEAR

Shift into neutral, pull up the upper stretch of the chain with a force of 10 - 15 kg (see figure). Measure the length of 18 links on the lower stretch of the chain. If the length is ≥ 272 mm, replace the chain. Chains do not always wear evenly. For this reason it is important that the measurement is taken at different points along the chain.

When fitting a new chain, be sure to replace the chainring and sprocket as well. New chains wear more quickly if fitted on old and worn sprockets. After replacing the chain, adjust its tension as described on page 55.

BATTERY

Battery is located under the saddle and requires no maintenance.

Keep the battery terminals clean. If necessary, protect them with a thin film of acid-free grease.

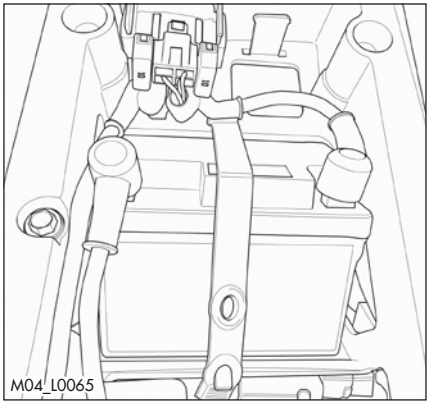

WARNING:
The battery contains hazardous substances:
- Keep the battery out of the reach of children.

- Keep sparks and open flames away from the battery.

- Charge the battery only in well-ventilated areas, keeping it away from flammable materials. Use only chargers suitable for charging lithium-ion batteries.

- Do not attempt to charge fully exhausted batteries with a voltage lower than the minimum 9V. In this case, dispose of the battery according to applicable regulations.

- Do not remove the protections.

- When installing the battery, be sure to observe the polarity of the terminals.

BATTERY REMOVAL

Shut off all electrical users and stop the engine.
Remove the saddle (page 68).

FIRST remove the cap **1** of the negative pole and disconnect the negative lug **2** (black) from the negative pole (-).

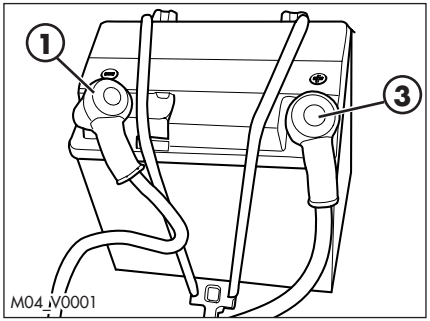

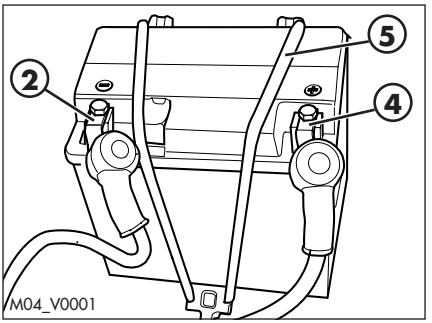

THEN remove the cap of the positive pole **3** and disconnect the positive lug **4** (red) from the positive pole (+).

Release the rubber band **5**.

Remove the battery.

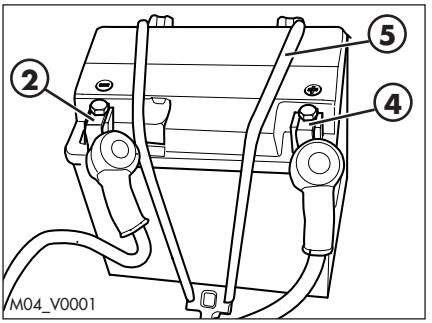

BATTERY ASSEMBLY

When fitting the battery, insert it with the terminals as shown in picture.

Reattach the rubber band **5**.

FIRST Connect the positive lug **4** (red) to the positive pole (+) of the battery by pushing the protective cap **3** in its position.

THEN secure the negative lug **2** (black) to the negative pole (-) of the battery by bringing the relative protective cap **1** in position.

Refit the saddle (page 68).

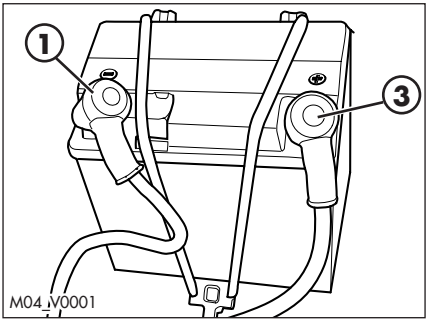

INACTIVITY

If the vehicle is not going to be used for a long time:
- remove the battery (page 59)
- charge with an adequate charger (page 61)
- store the battery in a dry place. The ideal temperature for storing the lithium-ion battery is 20°C.

CHARGING THE BATTERY



Check the battery charge using a multimeter or by pressing the "TEST" button on the battery (if it is present)

- Voltage < 9V or "LOW":
  - Do NOT charge the battery
  - Replace the battery with a new equivalent one
- Voltage <12.4V or "MED":
  - Charge the battery

Guidelines to charge the battery:

⚠ Use ONLY chargers suitable for charging lithium-ion batteries.

Maximum charging voltage: 14.4V
Maximum charging current: 3.0A
Maximum charge time:12h
Recharge the battery regularly with a specific battery charger when the vehicle is not used for more than 6 months
Ideal temperature for charging lithium ion batteries: 20 °C.

FUSES

To access the fuse, remove the saddle (page 68).

In the case of blown fuse, the vehicle will not start/stop:

Three spare fuses comes with the kit accompanying the vehicle.

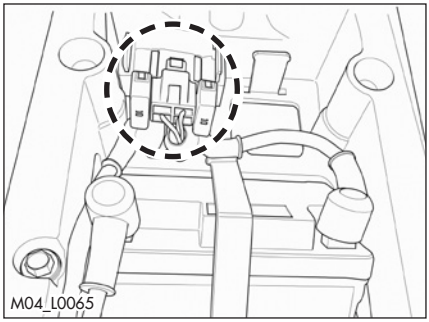

A blown fuse should only be replaced with another of the same type.
Should the new fuse also burn out when fitted, immediately contact a specialized BETAMOTOR dealer.

4 CLEANING THE VEHICLE

GENERAL PRECAUTIONS

WARNING: Do not clean your vehicle with a high-pressure device with a strong jet of water. Excessive pressure can reach electrical components, connectors, flexible cables, bearings, etc and can damage or destroy them.

WARNING: Wash motorbikes frequently with cold water that are used near the sea (salty air) and on roads subject to salt spreading in winter. Cover with a film of oil or silicone spray unpainted parts and the most exposed parts such as wheels, forks and swingarm. Do not treat rubber parts and brakes.

When cleaning, avoid direct exposure to sunlight.

Close off the exhaust system to prevent water from entering.

Avoid directing the jet of water onto the air filter box cover and the throttle body.

WASHING MODE

Use water jet to soften the dirt and mud accumulated on the paintwork, then remove them with a soft bodywork sponge soaked in water and shampoo. Subsequently rinse well with water, and dry with air and cloth or suede leather.

Detergents pollute water. Always wash the vehicle in areas equipped for collection and purification of the washing liquids.

AFTER WASHING

Proceed to the emptying of the filter box using the appropriate ventilation and drying.

After cleaning, ride a short distance until the engine reaches operating temperature.

WARNING: braking effect is reduced with wet brakes. Operate the brakes cautiously to allow them to dry.

Push back the handlebar control covers, so that water can evaporate.

When the bike is completely dry and cooled down, lubricate all moving parts.

Treat all plastic and painted components with non-aggressive detergents or products that are specific for the care of the motorcycle.

PROLONGED INACTIVITY

A few simple operations should be performed to keep the vehicle in good condition whenever it is to remain inactive for a long period (e.g. during the winter):

- Thoroughly clean the vehicle.
- Reduce the tyre pressures by approximately 30 percent, and if possible raise the tyres off the ground.
- Cover the unpainted parts, excepting the brakes and the rubber parts, with a film of oil or spray silicone.
- Protect the vehicle with a dust cover.

AFTER PROLONGED INACTIVITY

- Restore the tyre inflating pressures.
- Check the tightening of all the screws having an important mechanical function.

SCHEDULED MAINTENANCE VEHICLE

		Version#	End of running-in - **3** hours	Coupon **1** - **30** hours	Coupon **2** - **60** hours	Coupon **3** - **90** hours	Coupon **4** - **120** hours	Coupon **5** - **150** hours	Coupon **6** - **180** hours
Engine	Gear and clutch oil		**S**	**S**	**S**	**S**	**S**	**S**	**S**
	Spark plug		**C**		**S**		**S**		**S**
	Head screws		**T**						
	Engine clamping screws to the frame *		**C**	**C**	**C**	**C**	**C**	**C**	**C**
	Kick start and gearchange lever screws		**C**	**C**	**C**	**C**	**C**	**C**	**C**
	Spark plug cap		**P**	**P**	**P**	**P**	**P**	**P**	**P**
	Driving clutch disks (coated)	125/200		**C**	**S**	**C**	**S**	**C**	**S**
		250/300		**C**	**C**	**S**	**C**	**C**	**S**
	Clutch springs length			**C**	**C**	**S**	**C**	**C**	**S**
	Clutch hub - clutch bell			**C**	**C**	**C**	**C**	**C**	**C**
	Cylinder				**C**		**C**		**C**
	Piston and segments	125/200	**S every 40 hours**						
		250/300			**S**		**S**		**S**
	Connecting rod	125/200			**S**		**S**		**S**
		250/300				**S**			**S**
	Drive shaft bearings and seals	125/200			**S**		**S**		**S**
		250/300				**S**			**S**
	Surface appearance of the gearbox	125/200			**C**		**C**		**C**
		250/300				**C**			**C**
	Gearbox bearings (primary shaft)	125/200			**S**		**S**		**S**
		250/300				**S**			**S**
	Water pump oil seal					**S**			**S**
	Exhaust valve				**C/P**			**C/P**	
	Reed valve				**C**		**C**		**C**
Carburetor	Tightness		**C**	**C**	**C**	**C**	**C**	**C**	**C**
	Idling setting		**C**	**C**	**C**	**C**	**C**	**C**	**C**
	Fuel pipe		**C**	**C**	**C**	**C**	**C**	**C**	**C**
	Breather pipe		**C**	**C**	**C**	**C**	**C**	**C**	**C**
Assembling groups	Coolant system tightness and coolant level		**C**	**C**	**C**	**C**	**C**	**C**	**C**
	Exhaust manifold tightness		**C**	**C**	**C**	**C**	**C**	**C**	**C**
	Drives sliding and regulation		**C**	**C**	**C**	**C**	**C**	**C**	**C**
	Liquid level clutch pump		**C**	**C**	**C**	**C**	**C**	**C**	**C**
	Airbox and air filter		**P**	**P**	**P**	**P**	**P**	**P**	**P**
	Final transmission		**C**	**C**	**C**	**C**	**C**	**C**	**C**

If not specified it's worth for all the version

Key

C **Check** (Clean, adjust, lubricate, replace as necessary)
S **Replace/renew**
R **Adjust**
P **Clean**
T **Tighten**

USA

		Version#	End of running-in - **3** hours	Coupon **1** - **30** hours	Coupon **2** - **60** hours	Coupon **3** - **90** hours	Coupon **4** - **120** hours	Coupon **5** - **150** hours	Coupon **6** - **180** hours
Brakes	Liquid level, pads thickness		**C**	**C**	**C**	**C**	**C**	**C**	**C**
	Disc thickness		**C**	**C**	**C**	**C**	**C**	**C**	**C**
	Pipe tightness		**C**	**C**	**C**	**C**	**C**	**C**	**C**
	Idle travel levers and drives sliding		**C**	**C**	**C**	**C**	**C**	**C**	**C**
Cycling	Shock absorber and telescopic fork		**C**	**C**	**C**	**C**	**C**	**C**	**C**
	Rear suspension linkage		**C**	**C**	**C**	**C**	**C**	**C**	**C**
	Fork cover		**C**	**C**	**C**	**C**	**C**	**C**	**C**
	Fuel lines		**C**	**C**	**C**	**C**	**C**	**C**	**C**
	Bearings of stearing		**C**	**C**	**C**	**C**	**C**	**C**	**C**
	Bolts		**C**	**C**	**C**	**C**	**C**	**C**	**C**
Wheels	Wheel spokes and rim coaxiality		**C**	**C**	**C**	**C**	**C**	**C**	**C**
	Tyres (wear and pressure)		**C**	**C**	**C**	**C**	**C**	**C**	**C**
	Bearings clearance		**C**	**C**	**C**	**C**	**C**	**C**	**C**

If not specified it's worth for all the version

Key

C **Check** (Clean, adjust, lubricate, replace as necessary)
S **Replace/renew**
R **Adjust**
P **Clean**
T **Tighten**

WARNING:

For any service requirements, please contact Betamotor's Authorized Service Network.

4 TIGHTENING TORQUE OVERVIEW

Here below is an overview of the tightening torque of all pieces subject to adjustment or maintenance:

Forecarriage		
	Tightening torque [Nm]	Threadlock
Wheel pin	50	
Fork foots - wheel pin	10*	
Brake caliper - Fork	35	M
Left fork protection u-bolt	1,5	
Steering head base - fork legs	12*	
Steering head - fork legs	17*	
Stem pin on steering head	20	
Lower handlebar u-bolt - steering head	40	M
Upper handlebar u-bolt - lower handlebar u-bolt	25	

Rear axle		
	Tightening torque [Nm]	Threadlock
Wheel pin	130	
Rear shock absorber - frame	50	M
Rear shock absorber - rocker arm	50	
Connecting rod - frame	90	
Connecting rod - rocker arm	90	
Rocker arm - swinging arm	90	

Engine		
	Tightening torque [Nm]	Threadlock
Gearbox oil drain plug	15	

Engine - Frame				
(*) Fixing	Version#	Screw	Threadlock	Tightening torque [Nm]
Engine to the frame		Special screw M10		45
Fixing head to frame tightening brakets		M8x16	M	35
Brackets to attach the head - motor	125/200	M8x16	M	35
	250/300	M8x60	M	35

If not specified it's worth for all the version

M Medium strength threadlock

* WARNING:
Tightening of the screws should be carried out by adjusting the torque wrench to the stability torque with repeated tightening until stability torque has been achieved.

CHAPTER 5 REMOVING AND INSTALLING SUPERSTRUCTURES

CONTENTS

Removing and installing of the saddle.....68
Removing and installing air filter side panel.....69
Removing and installing of the complete tank.....69

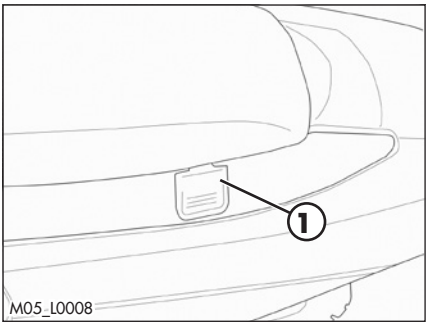

REMOVING AND INSTALLING OF THE SADDLE

Press button **1**.

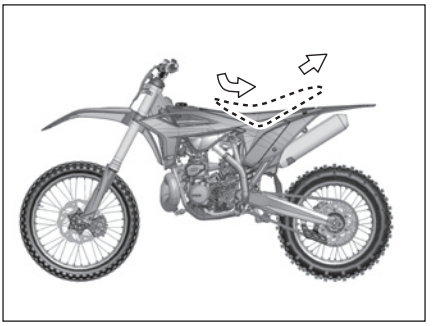

Remove the saddle towards the rear of the motorcycle.

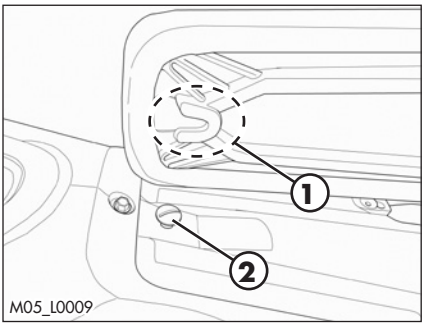

To re-assemble:
Insert the cavity **1** of the saddle in slot **2**.

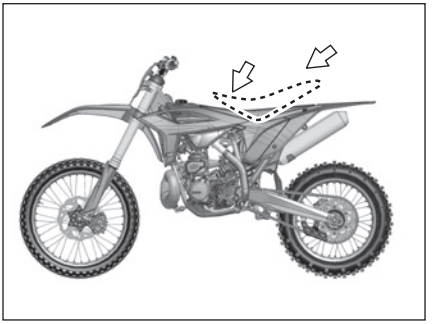

Press the saddle down in the middle and at the same time, push it forwards until the bayonet joint engages in its seat.

WARNING
Make sure the bayonet joint **3** is firmly inserted into the button lock.

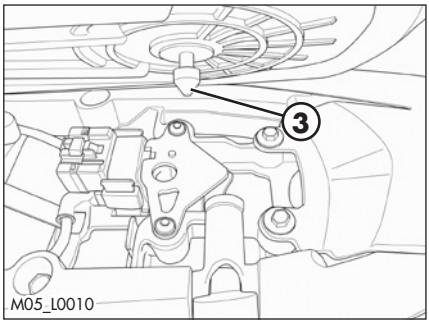

REMOVING AND INSTALLING AIR FILTER SIDE PANEL

Grab the side panel in the front side and pull out.

To refit insert the tabs **1** into their slots.

Slide the side panel toward the vehicle.

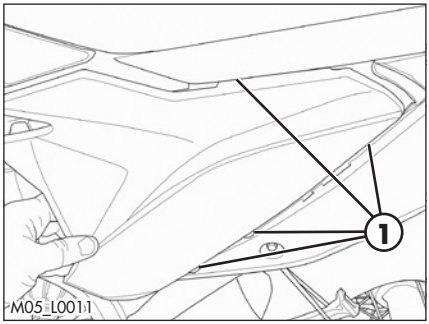

REMOVING AND INSTALLING OF THE COMPLETE TANK

Disconnect the fuel tank vent pipe.

Turn the fuel cock to OFF position (page 18) and disconnect the fuel hose from the fuel cock.

WARNING:
Follow action on a cold engine and in a well ventilated area.

WARNING:
Fire hazard. Fuel is highly flammable.

Always stop the engine when refuelling and keep open flames and lighted cigarettes away.

Immediately clean up any spilled fuel.

Remove the saddle (page 68).

Remove the screw **1** fastening the tank to the frame and the screws **2** (one per side) securing the fairing to the radiator.

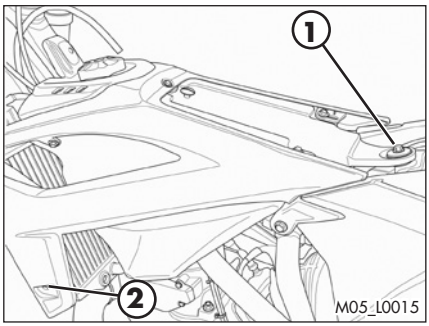

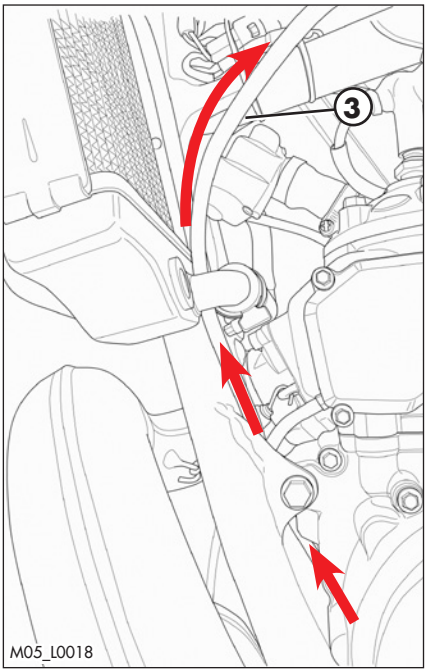

Lift the tank slightly and:
• remove the tube **3**.

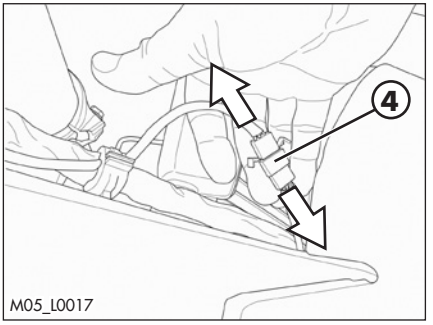

• disconnect the connector **4**.

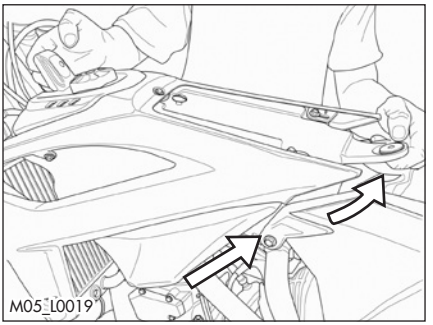

Lift the tank backwards and remove the tank towards the rear.

To refit the tank proceed as follows:
- place the tank to the vehicle and connect the connector **4**.

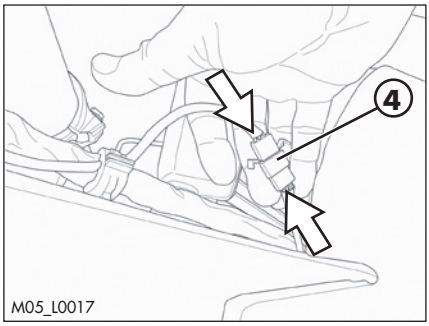

Insert the hose **3** following the passage as shown in figure.

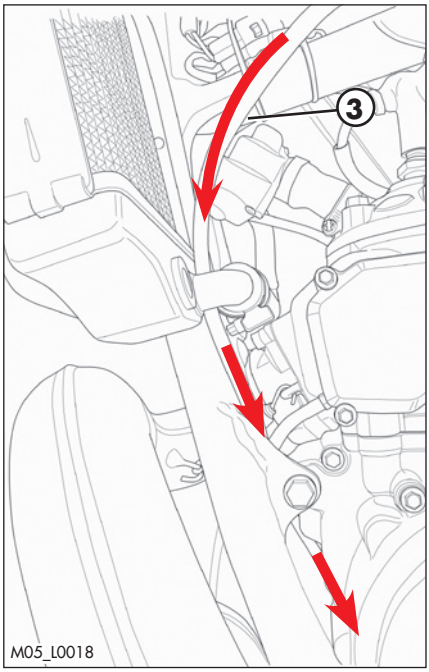

Tighten the tank screws to the torques given.
When assembly is complete, lightly pull the tube **3** so that it is stretched correctly.

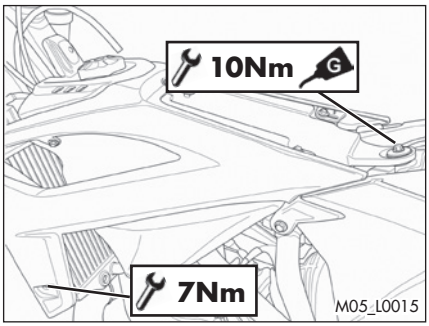

CHAPTER 6 TROUBLESHOOTING

CONTENTS

Troubleshooting 74
Alphabetical index 75

6 TROUBLESHOOTING

PROBLEM	CAUSE	REMEDY
Engine does not start	-Fuel system clogged (fuel lines, fuel tank, fuel cock)	Contact authorised BETAMOTOR customer service
	- Air filter dirty	Check the air filter
	- No spark	Clean or replace the spark plug. If the problem persists, contact authorised BETAMOTOR customer service
	- Blown fuse	Check and replace the fuse on the starting relay
	- Engine flooded	Operate the electrical starter push button 2 times for 5 seconds. If the vehicle does not start, remove and dry the spark plug
	- Battery is low	Charge or replace the battery
	- Excessive spark plug gap	Check the distance between the electrodes
	- Ignition connector or coil slackened or oxidized	Clean with a spray product for electric contacts and tighten
	- Presence of water in the carburettor	Empty the carburettor tank
Engine misfires	- Excessive spark plug gap	Restore the spark gap
	- Spark plug dirty	Clean or replace the spark plug
The engine does not hold idling	- Idling air jet clogged	Contact authorised BETAMOTOR customer service
	- Adjustment screws poorly adjusted	Adjust
	- Faulty spark plug	Replace the spark plug
	- Faulty ignition system	Check the coil and the spark plug cap and/or contact authorised BETAMOTOR customer service
Engine overheats and loses power	- Silencer partly clogged	Contact authorised BETAMOTOR customer service
	- Laminar pack damaged	Contact authorised BETAMOTOR customer service
	- Fault in the ignition system	Contact authorised BETAMOTOR customer service
Excessive smoke	- Possible mixer system fault	Contact authorised BETAMOTOR customer service
Front braking poor	- Brake pads worn	Contact authorised BETAMOTOR customer service
	- Air or humidity in the hydraulic circuit	Follow the procedure described on page 47
Rear braking poor	- Brake pads worn	Contact authorised BETAMOTOR customer service
	- Air or humidity in the hydraulic circuit	Follow the procedure described on page 50

ALPHABETICAL INDEX

Adjusting fork 32
Adjusting the idle speed 27
Adjustment of gas clearance 27
Air filter 40

Battery 59
Brakes 26
Breaking in 22

Carburettor 44
Chain 57
Check and adjusting of steering play 54
Checks before and after use 22
Cleaning the vehicle 62
Clutch 27
Clutch control 52

Engine oil 36
Engine shut-down 24
Exhaust valve control adjustment 30

Familiarizing with the vehicle 9
Fork 55
Front brake 46
Front wheel 55
Fuses 16
Fuses 61

Handlebar adjustment 30

Key to symbols 26
Key to symbols 36

Liquid coolant 38

Main parts 18

Operating instructions 5

Prolonged inactivity 63

Rear brake 49
Rear suspension leverage 56
Recommended lubricants and liquid 16
Refuelling 23
Removing and installing air filter side panel 69
Removing and installing of the complete tank 69
Removing and installing of the saddle 68
Riding safety 6

Scheduled maintenance vehicle 64
Shock absorber 32
Spark plug 43
Specifications 10
Starting the engine 24
Symbols 5

Tightening torque overview 66
Tools kit 8
Troubleshooting 74
Tyres 56

Vehicle identification data 8