RR

250cc & 300cc
STANDARD & RACE EDITION

Beta
motorcycles



2019 OWNERS MANUAL

Rideability

RR 250 2T - RR 3002T

Thanks for you preference, and have a good time! This handbook contains the information you need to properly operate and maintain your motorcycle.

The data, specifications and images shown in this manual does not constitute an engagement on the part of BETAMOTOR S.p.A. BETAMOTOR reserves the right to make any changes and improvements to its models at any moment and without notice.

Code 026.44.032.00.00

IMPORTANT

We recommend you to check all the tightenings after the first one or two hours' ride over rough ground. Special attention should be paid to the following parts:

- rear sprocket
- ensure that the footrests are properly fixed
- front/rear brake levers/calipers/discs
- check that the plastics are properly fastened
- engine bolts
- shock absorber bolts/swingarm
- wheel hubs/spokes
- rear frame
- pipe connections
- tensioning the chain

IMPORTANT

In the event of interventions on the vehicle, contact Betamotor after-sales service.

CONTENTS

Operating instructions 5
Symbols 5
Riding safety 6

CHAPTER 1 GENERAL INFORMATION 7
Vehicle identification data 8
Tools kit 8
Familiarizing with the vehicle 10
Specifications 11
Electrical system 14
Recommended lubricants and liquid 16

CHAPTER 2 OPERATION 17
Main parts 18
Digital rpm indicator operating instructions 23
Checks before and after use 33
Running in 33
Refuelling 34
Oil mixer refuelling 34
Starting the engine 35
Engine shut-down 35

CHAPTER 3 ADJUSTMENTS 37
Key to symbols 38
Brakes 38
Clutch 38
Adjustment of gas clearance 39
Adjusting the idle speed 39
Exhaust valve control adjustment 43
Handlebar adjustment 43
Adjusting fork 44
Shock absorber 45

CHAPTER 4 CHECKS AND MAINTENANCE 49
Key to symbols 50
Engine oil 50
Liquid coolant 51
Air filter 54
Spark plug 55

CONTENTS

Carburettor 56
Front brake 58
Rear brake 61
Clutch control 64
Check and adjusting of steering play 66
Fork 67
Front wheel 67
Tyres 68
Rear suspension leverage 68
Chain 69
Headlight 71
Replacing the headlight bulbs 71
Tail light 71
Battery 72
Fuses 74
Cleaning the vehicle 75
Prolonged inactivity 76
Scheduled maintenance vehicle 77
Tightening torque overview 79

CHAPTER 5 REMOVING AND INSTALLING SUPERSTRUCTURES 81
Removing and installing of the saddle 82
Removing and installing air filter side panel 83
Removing and installing of the complete tank 83

CHAPTER 6 TROUBLESHOOTING 85
Troubleshooting 86

OPERATING INSTRUCTIONS

- The vehicle must be accompanied by: number-plate, registration document, tax disc and insurance.
- Any modifications of the engine or other parts are punishable by severe sanctions including the confiscation of the vehicle.
- To protect your safety and that of others, always drive carefully and with your helmet on and always keep low beams on.
- Do not sit on the vehicle when it is on its stand.
- Do not start the engine in closed places.

WARNING
Any modifications and tampering with the vehicle during the warranty period exempt the manufacturer from all responsibility and invalidate warranty.

SYMBOLS


SAFETY/ATTENTION
Failure to respect information marked with this symbol can entail a personal hazard.


INTEGRITY OF THE VEHICLE
Failure to respect information marked with this symbol can entail serious damage to the vehicle and termination of the warranty.


FLAMMABLE LIQUID HAZARD


Read the use and maintenance manual carefully.


MANDATORY TO WEAR PROTECTIVE CLOTHING
Use of the vehicle is subject to wearing specific protective clothing and safety footwear.


PROTECTIVE GLOVES MANDATORY
To perform the operations described, it is mandatory to wear protective gloves.


FORBIDDEN TO USE NAKED FLAMES OR POSSIBLE UNCONTROLLED IGNITION SOURCES


NO SMOKING


DO NOT USE MOBILE PHONE


CORROSIVE SUBSTANCES HAZARD
Liquids marked with this symbol are highly corrosive: handle with care


POISONING HAZARD

RIDING SAFETY

- Observe the Highway Code.
- Always wear approved personal protective equipment.
- Always keep the crash helmet visor clean.
- Do not keep sharp or brittle objects in your pockets while riding.
- Properly adjust the rearview mirrors.
- Always ride in a seated position, with both hands on the handlebars and both feet on the footrests.
- Never ride abreast with other vehicles.
- Do not tow and avoid being towed by other vehicles.
- Always keep a safe distance from other vehicles.
- Do not start off while the vehicle is on its stand.
- Avoid swaying and wheelies as they are extremely dangerous for your own and other people's safety as well as for your vehicle.
- Always apply both brakes on dry roads with no gravel and sand. Using one brake may be dangerous and cause uncontrolled skidding.
- To reduce the braking distance, always apply both brakes.
- On wet roads and in off-road riding, drive with care and at moderate speed. Take special care in applying the brakes.

CHAPTER 1 GENERAL INFORMATION

CONTENTS

Vehicle identification data 8
Frame identification 8
Engine identification 8
Tools kit 8
Familiarizing with the vehicle 10
Main parts: 10
Specifications 11
Weight 11
Dimensions 11
Tyres 11
Capacities 11
Front suspension 12
Rear suspension 12
Front brake 12
Rear brake 12
Engine 12
Electrical system 14
Electrical diagram 14
Legend electrical diagram 15
Recommended lubricants and liquid 16

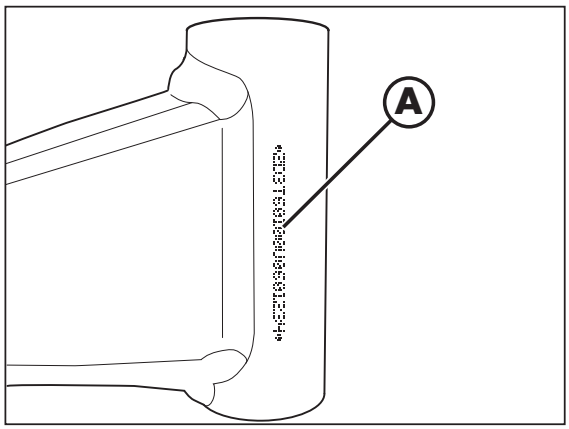

VEHICLE IDENTIFICATION DATA

FRAME IDENTIFICATION

Frame identification data **A** are stamped on the right side of the steering head tube.

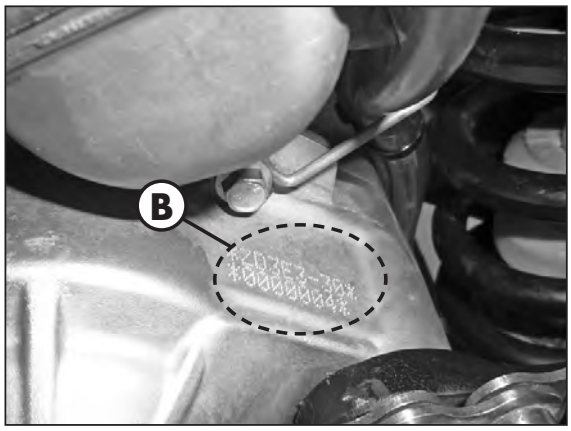

ENGINE IDENTIFICATION

Engine identification data **B** are stamped in the area shown in the figure.



TOOLS KIT

The following items are supplied as standard: operation, maintenance manual, tool kit.

The hex key **1** and its socket wrench (8 mm) are found inside the battery compartment. Remove the seat to reach them (page 82).

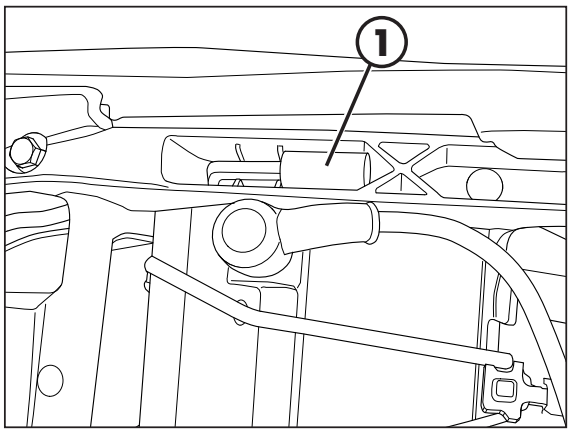

FAMILIARIZING WITH THE VEHICLE

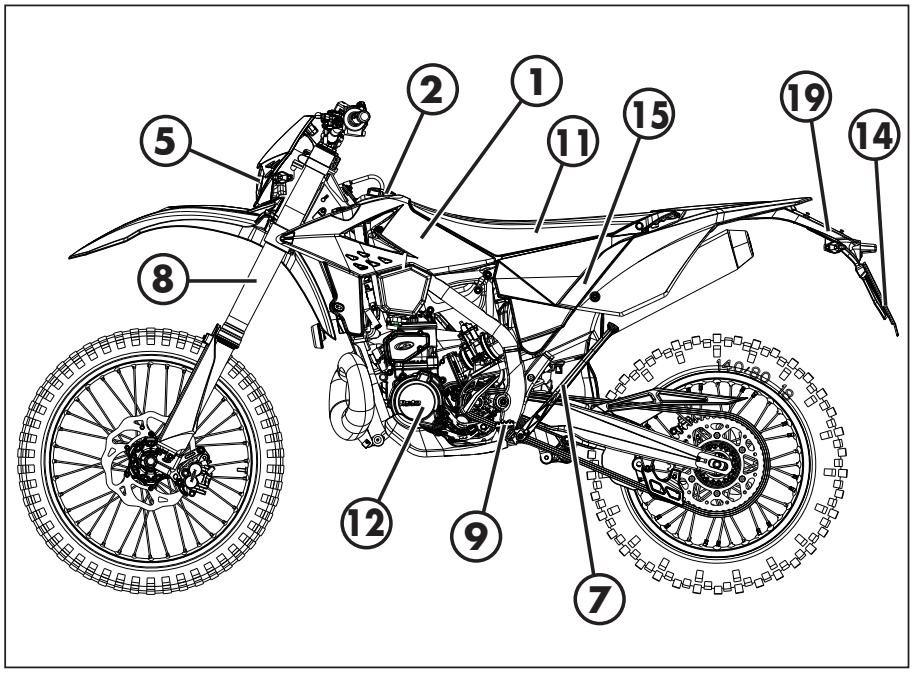

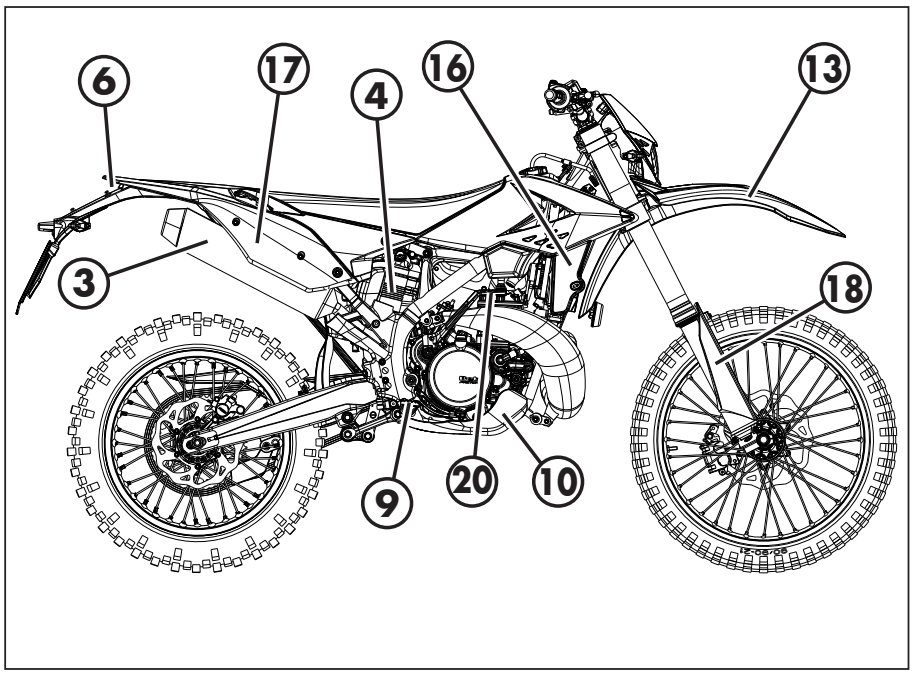

MAIN PARTS:

1 - Fuel tank
2 - Tank cap
3 - Silencer
4 - Rear shock absorber
5 - Headlight
6 - Rear light
7 - Side stand
8 - Fork
9 - Rider's footrests
10 - Lower bumper (Bumper kit)
11 - Saddle
12 - Engine
13 - Front mudguard
14 - Number-plate holder
15 - Side panel air filter cover
16 - Front side panel
17 - Rear side panel
18 - Fork covers
19 - Rear mudguard
20 - Kickstarter

SPECIFICATIONS

WEIGHT

Weight in running order with full fuel and optional
..... 118 kg (front 57 Kg; rear 61 Kg)

DIMENSIONS

maximum length (with plate holder) ..... 2270 mm
maximum width ..... 807 mm
overall height ..... 1270 mm
wheelbase..... 1482 mm
saddle height..... 930 mm
ground clearance..... 320 mm
footrest height..... 407 mm

FRAME ..... molybdenum steel with double cradle split above exhaust port

TYRES

Dimensions		Pressure [Bar]	
Front tyre	**Rear tyre**	**Front tyre**	**Rear tyre**
90/90-21	**140/80-18**	**1,5 (road use)**	**1,8 (road use)**
		1 (off-road use)	**1 (off-road use)**

front rim..... 21x1,6 - 36 holes
rear rim ..... 18x2,15 - 36 holes

CAPACITIES

fuel tank.....9,5 liter
including reserve.....1,5 liter
oil mixer tank .....0,55 litri
coolant circuit.....1,3 liter
gear oil..... 800 ml following normal maintenance work
.....850 ml following a complete engine review

FRONT SUSPENSION

Open cartridge hydraulic upside-down fork (Ø48 mm shafts)
spring ..... K 4,2
oil type ..... FUCHS SAE 5W
oil quantity ..... 510 g
wheel excursion ..... 290 mm
compression clicks (from completely closed) 12
rebound clicks (from completely closed) 12
sping preload clicks (from completely open) 0

REAR SUSPENSION

Single shock absorber with compound lever
spring ..... K 5,2
static sag load (see page 47) ..... 35 mm
shock absorber travel ..... 135 mm
rear wheel travel ..... 290 mm
compression clicks, high speeds (from completely closed) 20
compression clicks, low speeds (from completely closed) 22
rebound clicks (from completely closed) 15

FRONT BRAKE

Ø 260 mm disc and dual-piston floating caliper

REAR BRAKE

Ø240 mm disc and single-piston floating caliper

ENGINE

Version	**RR 250**	**RR 300**
Type	Single-cylinder, 2-stroke, liquid cooled and electric start	
Bore x stroke [mm]	66,4 x 72	72 x 72
Displacement [cm³]	249	293,1
Compression ratio	13,2:1	11,9:1
CO_2 [g/km] * #	59	65
Fuel consumption [l/100km] * #	2,493	2,726

* Only valid for EUROPA version
# WMTC cycle related data, for class L vehicles

Fuel system ..... carburetor with mixer

Carburetor

Version	RR 250 Europe	RR 250	RR 300 Europe	RR 300
Main jet	130	165	130	165
Slow jet	38	38	35	38
Start jet	50	85	50	85
Needle	N84K	N0ZJ	N84K	N2ZW
Needle position (from top)	2°	3°	2°	2°
Air screw turns (from all closed)	1+1/2	1+1/4	2	1+1/4

Cooling system ..... forced liquid circulation by pump

Spark plug RR 250..... NGK BR8ECM
Spark plug RR 300..... NGK BR7ES

Clutch..... wet, multidisc

Gearchange

Version	RR 250 Europe	RR 250	RR 300 Europe	RR 300
Primary drive	27/72	27/72	27/72	27/72
Gear ratio 1st gear	12/31	12/31	12/31	12/31
Gear ratio 2nd gear	15/28	15/28	15/28	15/28
Gear ratio 3rd gear	19/28	19/28	19/28	19/28
Gear ratio 4th gear	20/24	20/24	20/24	20/24
Gear ratio 5th gear	27/27	27/27	27/27	27/27
Gear ratio 6th gear	28/24	28/24	28/24	28/24
Final drive	15/45	14/49	15/45	14/48

Exhaust valve.....centrifugal operation with reaction springs

Ignition ..... CDI without trembler, with digital variable spark advance

Starting.....electric starter (Kick-starter optional)

ELECTRICAL SYSTEM

ELECTRICAL DIAGRAM

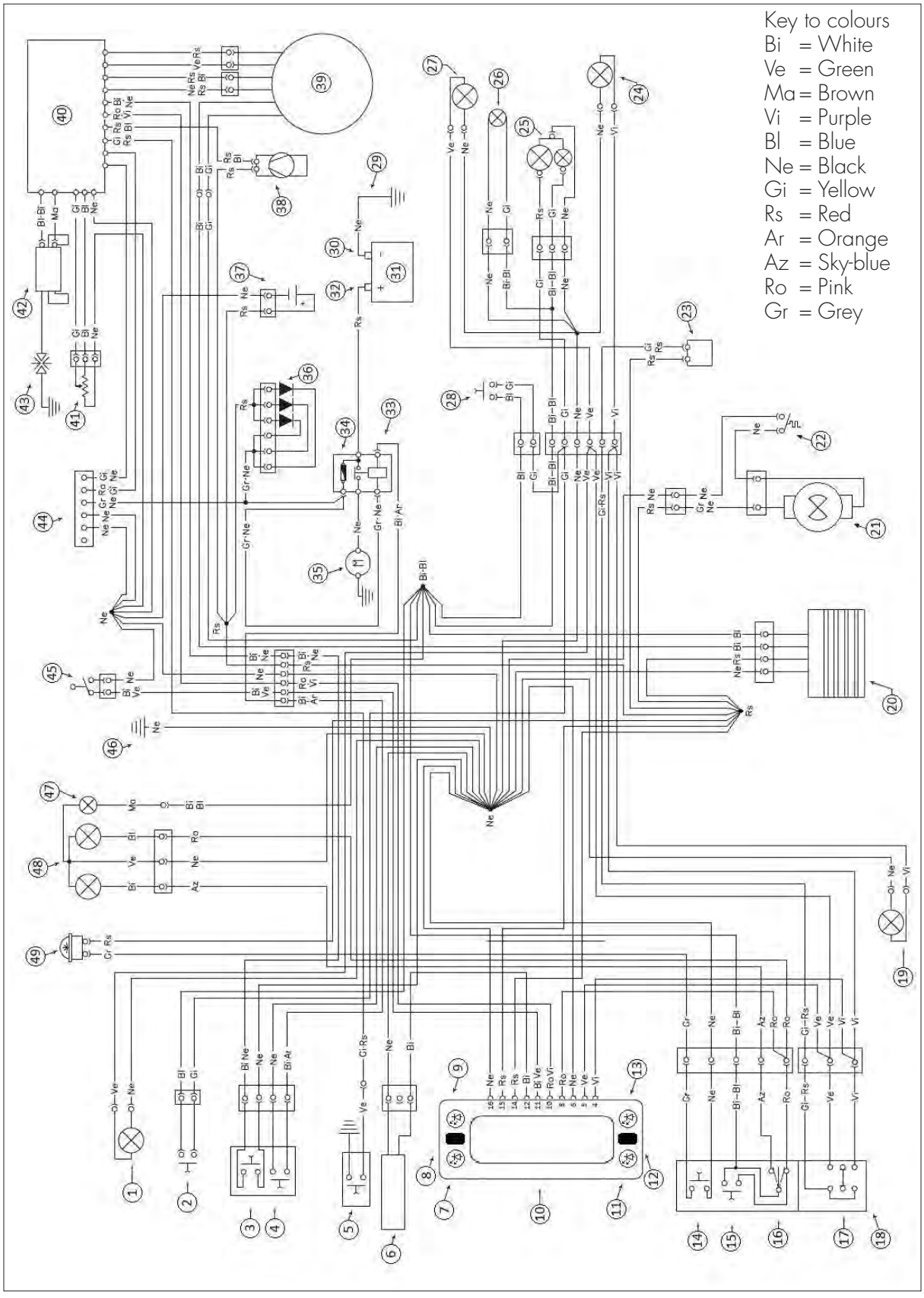

LEGEND ELECTRICAL DIAGRAM

1) RIGHT-HAND FRONT TURN INDICATOR 12V 6W
2) FRONT BRAKE LIGHT BUTTON
3) ENGINE STOP BUTTON
4) START BUTTON
5) SECOND MAP SWITCH (OPTIONAL)
6) WHEEL REVOLUTION SENSOR
7) TURN INDICATORS WARNING LIGHT
8) RIGHT BUTTON
9) OIL RESERVE WARNING LIGHT
10) DASHBOARD
11) HEADLIGHT TELL TALE LAMP
12) LEFT BUTTON
13) MIXER DIAGNOSIS WARNING LIGHT
14) HORN BUTTON
15) FLASH-TO-PASS BUTTON
16) HEADLIGHT SELECTOR
17) TURN SIGNAL LAMPS SWITCH
18) LEFT-HAND CONTROL GROUP
19) LEFT-HAND FRONT TURN INDICATOR 12V 6W
20) REGULATOR
21) ELECTRIC FAN (OPTIONAL)
22) THERMOSWITCH
23) UNIT TURN SIGNAL LAMPS
24) LEFT-HAND REAR TURN INDICATOR (12V 6W BULB)
25) TAIL LIGHT WITH LED
26) NUMBER-PLATE LIGHT
27) RIGHT-HAND REAR TURN INDICATOR (12V 6W BULB)
28) REAR STOP BUTTON
29) FRAME EARTH
30) BATTERY NEGATIVE TERMINAL
31) BATTERY 12V 9AH
32) BATTERY POSITIVE TERMINAL
33) STARTER RELAY
34) 10A FUSE
35) STARTER MOTOR
36) DIODES GROUP
37) CONDENSATOR 4700 µF
38) OIL PUMP
39) GENERATOR
40) ELECTRONIC CONTROL UNIT
41) TPS
42) HT COIL
43) SPARK PLUG
44) DIAGNOSIS CONNECTOR
45) OIL RESERVE SENSOR
46) FRAME EARTH
47) PARKING LIGHT 12V 5W
48) HEADLIGHT (12V-35/35W BULB)
49) 12V HORN

RECOMMENDED LUBRICANTS AND LIQUIDS

RR & Xtrainer 2 Stroke Models: (Models WITH Oil Injection)

Injection Oil:	Motul 710
Transmission Oil	Motul Transoil Expert 10w40
Brake Fluid	Motul RBF 600
Coolant/Antifreeze	Motul Motocool Expert
Fork Oil	Motul Factory Line 5 wt.
Air Filter Oil	Motul Air Filter Oil
Air Filter Cleaner	Motul Air Filter Clean
Grease	Motul Tech 300

RR 2 Stroke RACE EDITION Models: (Models WITHOUT Oil Injection)

Premix Oil:	Motul 800 2T (60:1)
Transmission Oil	Motul Transoil Expert 10w40
Brake Fluid	Motul RBF 600
Coolant/Antifreeze	Motul Motocool Expert
Fork Oil	Motul Factory Line 5 wt.
Air Filter Oil	Motul Air Filter Oil
Air Filter Cleaner	Motul Air Filter Clean
Grease	Motul Tech 300

CHAPTER 2 OPERATION

CONTENTS

Main parts 18
- Fuel tank cap 18
- Fuel cock 18
- Starter 19
- Mixer oil tank cap 19
- Clutch lever 19
- LH switch 20
- RH switch 20
- Front brake lever and gas control 20
- Gear change lever 21
- Brake pedal 21
- Kickstart - optional 21
- Side stand 21
- Keys 22
- Steering lock 22

Digital rpm indicator operating instructions 23
Checks before and after use 33
Running in 33
Refuelling 34
Oil mixer refuelling 34
Starting the engine 35
Engine shut-down 35

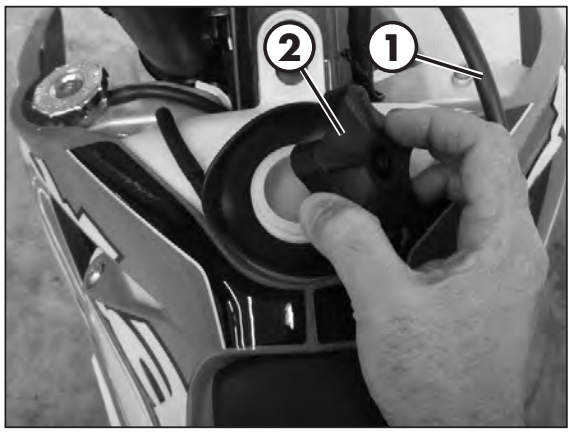

MAIN PARTS

FUEL TANK CAP

Use unleaded petrol (gasoline).

Disconnect the ventilation pipe **1**.
To open the tank turn the cap **2** anticlockwise.

To close the fuel tank's cap, set it on the tank and crew it clockwise.



FUEL COCK

Fuel cock has three positions:

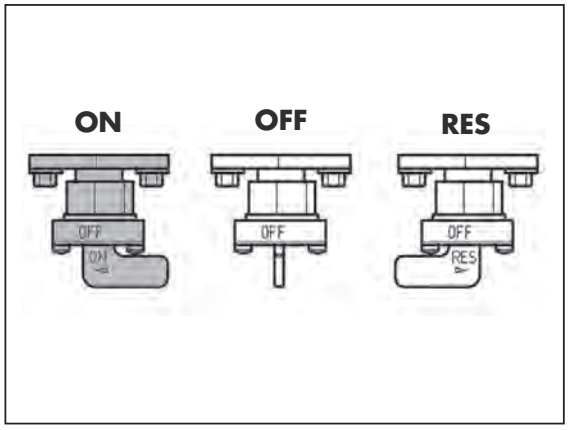

OFF: fuel supply closed. Fuel cannot pass from the tank to the carburettor.

ON: fuel supply enabled. Fuel flows from the tank to the carburettor. The tank empties until it reaches the reserve level.

RES: reserve fuel supply. Fuel flows from the tank to the carburettor and the tank empties completely.

STARTER

The starter lever is located on the carburettor.

To operate the choke pull it upward.



MIXER OIL TANK CAP

The mixer oil tank cap is located under the saddle

To gain access remove the saddle (page 82).

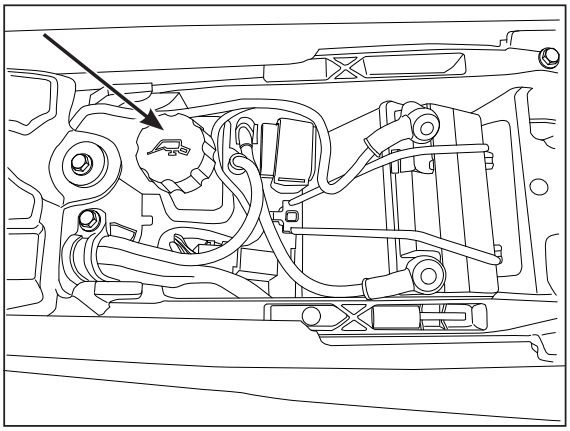

To open the fuel tank cap turn it anticlockwise.

To close the fuel tank cap, set it on the tank and screw it clockwise.

CLUTCH LEVER

Clutch lever is fitted to the left-hand side of the handlebars.

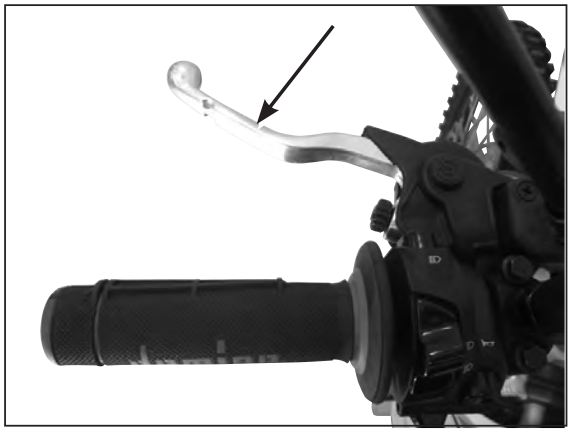

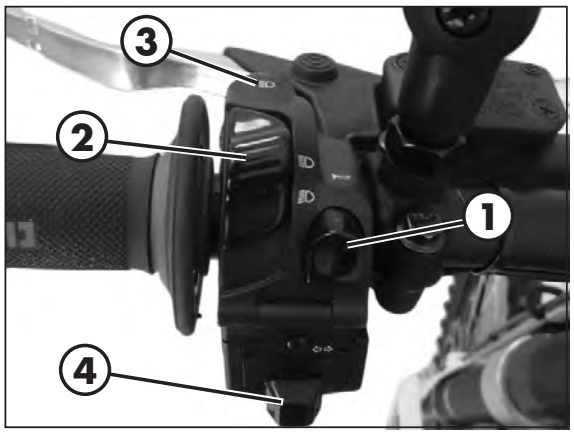

LH SWITCH

The dip and service switch is located on the left side of the handlebar and is composed as follows:

1 - Horn button;

2 - Dip switch:

parking lights and high beam;

parking lights and low beam;

3 - Flash-to-pass button;

4 - Turn signal light switch: shifting lever left or right activates the left or right indicators. When released, the lever returns to the central position. Press it to turn the indicators off.

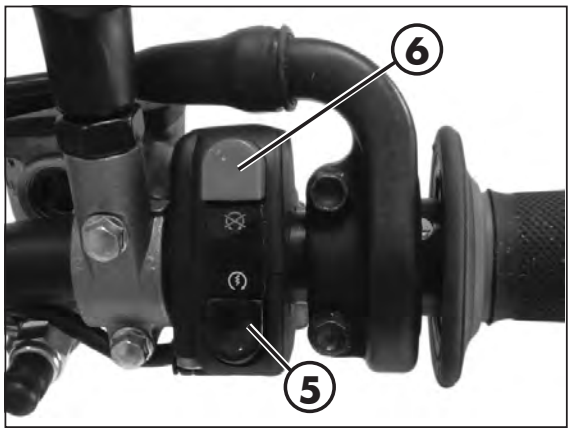

RH SWITCH

Starter button **5** is located on the right-hand side of the handlebars and operate the electric engine starter. For startup, refer to page 35.
Do not press the button **5** while the engine is running.

The button **6** turns off the engine.

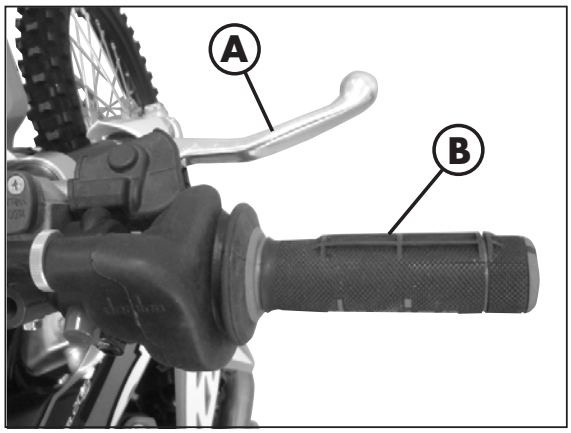

FRONT BRAKE LEVER AND GAS CONTROL

The front brake lever **A** and the gas throttle **B** are located on the right side of the handlebar.

GEAR CHANGE LEVER

Gear change lever is fitted to the left side of the engine.
The positions corresponding to the different gears are shown in the figure.

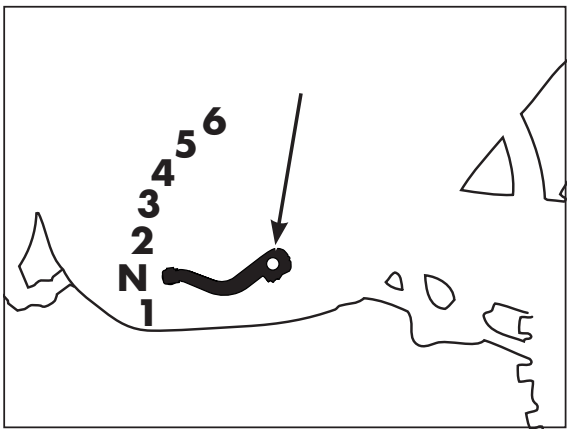

BRAKE PEDAL

Brake pedal is located in front of the right-hand footrest.

The rear brake is operated by pressing down the pedal.

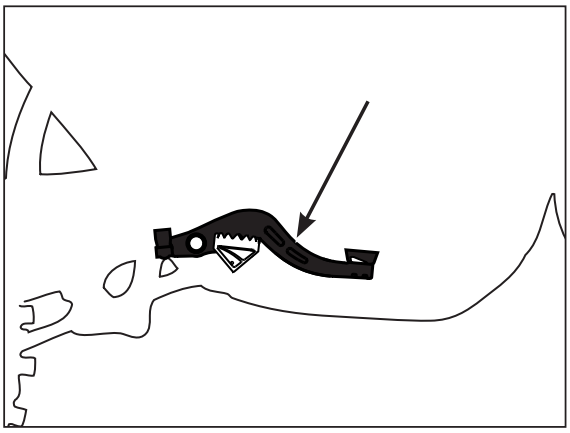

KICKSTART - OPTIONAL

Kickstart is fitted to the right-hand side of the engine.
The upper part of the kickstart can be oriented.

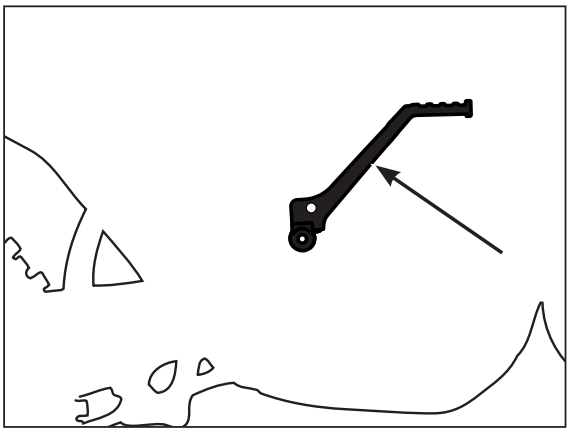

SIDE STAND

Press down side stand with the foot and lean the vehicle against it.
Ensure that the ground is solid and the vehicle stands steadily.

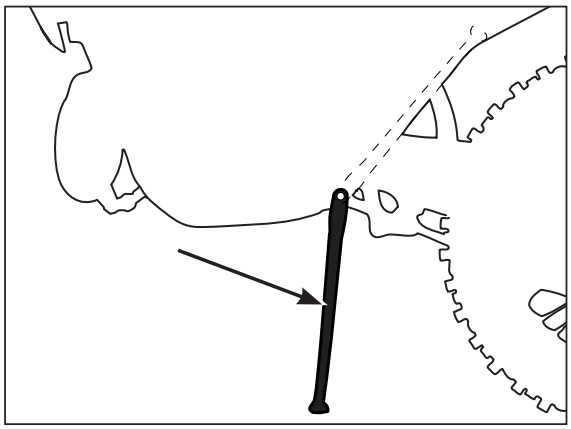

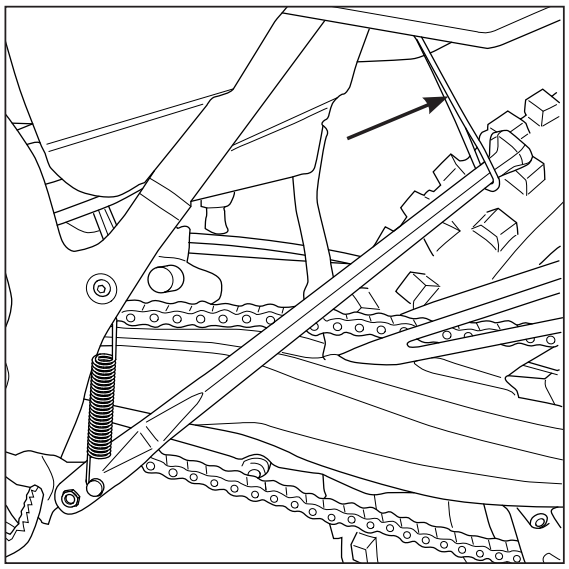

If the vehicle is used off-road, the closed stand can be further fastened by means of rubber band.

KEYS

The vehicle is supplied with two keys (one key and its spare).

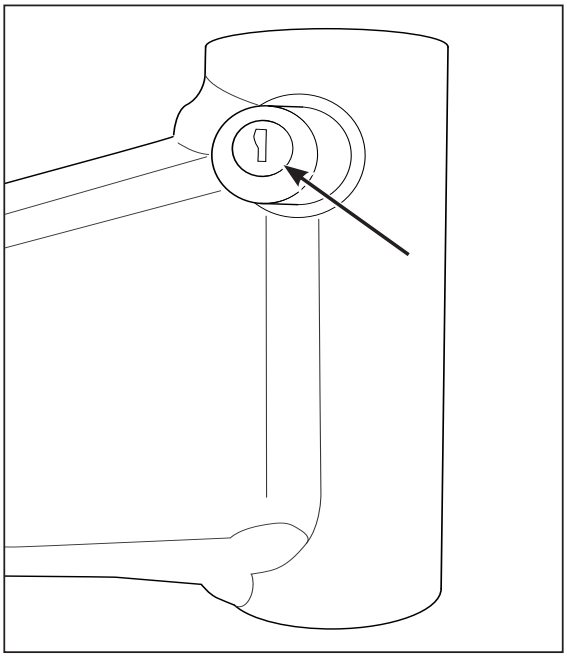

STEERING LOCK

To activate the steering lock:
- turn the handlebar counter-clockwise;
- push the key and turn counter-clockwise;

Remove the key from this position.
To deactivate the steering lock:
- turn the key clockwise;
- turn the handlebar clockwise;

From this position, the handlebar is free to move, the key can be removed.

WARNING: do not keep the spare key inside the vehicle, but in a safe place.
We suggest you note the code number stamped on the keys. In this way you can obtain a duplicate.

DIGITAL RPM INDICATOR OPERATING INSTRUCTIONS

Index

1 General information
2 Operating condition
3 General characteristics
3.1 Dashboard start-up process
3.1.1 Wake up events
3.2 LCD Display
3.2.1 LCD general characteristics
3.2.2 Speed
3.2.3 Odometer
3.2.4 Trip A
3.2.5 Trip B
3.2.6 Clock
3.2.7 Ride Time
3.2.8 Unit option display
3.2.9 Wheel length display
3.2.10 Motorbike battery level
3.2.11 Push Button Management Table
3.3 Telltales
4 Coin battery

1 GENERAL INFORMATION

The dashboard integrates these main blocks:

- LCD display for showing all required information
- 2 pushbuttons
- Coin battery



2 OPERATING CONDITION

Standard supply voltage:	10 to 16V
Minimum supply voltage w/o reset:	6.5V

3 GENERAL CHARACTERISTICS

3.1 DASHBOARD START-UP PROCESS

The dashboard do some start-up process when is turned ON. There are three different wakes up events for starting the dashboard.

This start-up process consists in turning ON the telltales and the LCD backlight and the LCD will show all the segments during 2 seconds.
After the start-up process, dashboard is kept ON during 30 seconds if there are no events as pushbutton press, speed signal or engine ON.

3.1.1 WAKE UP EVENTS

3.1.1.1 Motorbike power supply is activated

When the power supply of dashboard is activated (e.g. when engine is turned on), the dashboard does the normal start-up process and is kept ON while

3.1.1.2 Wheel revolution

If the motorbike generated a speed pulse, the dashboard will be turned ON doing the normal start-up process. After the start-up process the dashboard will display the normal mode, and will be ON during 30 seconds if no speed pulse is generated.

3.1.1.3 Button is pushed

If one or both buttons are pushed the dashboard will be turned ON doing the start-up process.
After the start-up process the dashboard will display the normal mode, and will be ON during 30 seconds if no pushbutton is pressed.

3.2 LCD DISPLAY

Dashboard is equipped with a LCD display for showing following information:

- Speed
- SoC vehicle battery
- Odometer (distance or ride time)
- Trip TOTAL-A-B (distance or ride time)
- Clock

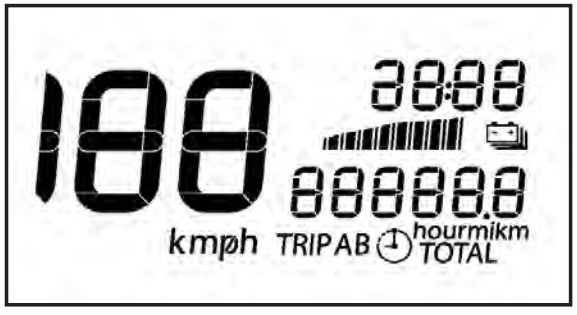

Each information/data is refreshed independently at different rate, depending on information type and variability of this information.

3.2.1 LCD GENERAL CHARACTERISTICS

Each information/data is refreshed independently at different rates, depending on information type and variability of this information.

3.2.2 SPEED

Dashboard computes and displays the motorbike speed on LCD display. Speed information can be obtained from:
Dedicated digital input for measuring speed sensor frequency.

3.2.2.1 Speed digital input configuration

Configuration parameters for speed input and speed visualization.
Dimensions displayed: [km/h or mph]
Minimum speed indication: [5 km/h]
Speedometer advance: [5 %]

Wheel parameters:

- Wheel perimeter selectable between 2 values:
  - Default wheel perimeter value: (enduro) 2100mm
  - 2nd wheel perimeter value: 1811mm

- Pulses per turn: [1 pulses/turn]

3.2.2.2 Speed LCD

Speed and speed units are permanently displayed (km/h or mph).
km/h display range: 0 to 199km/h.
mph display range: 0 to 199mph.
Leading zeros suppressed.
Following picture shows LCD displaying speed in km/h and mph:





3.2.3 ODOMETER

Dashboard provides an odometer and is displayed on LCD display.
This option can be displayed scrolling by "MODE" button.
6 digits and "ODO" icon lighted.
Leading zeros not suppressed.
Display range from 000000 to 999999 km or miles. If odometer is greater than 999999 km, odometer will be fixed as 999999km.
Minimum display unit: 1 km or mile.



3.2.4 TRIP A

Dashboard provides 2 trips and is displayed on LCD display.
This option can be displayed scrolling by "MODE" dashboard button.
4 digits (3digits + decimal point + 1 digit), "TRIP" icon lighted and "A" on the left.
Leading zeros suppressed.
Display range from 0.0 to 999.9 km or miles.
Trip A counter counts from 0 up to 999.9 and then rolls over to 0 and continue counting.
Minimum display unit: 0.1 km or miles.
Trip A reset by pressing "SET" button more than 2 seconds.
Trip A display the Trip A ride time pressing "SET" button less than 2 seconds. Ride time is showed as an hour decimal number. Examples: 30 min is 0.5 or 1h20min is 1.3.

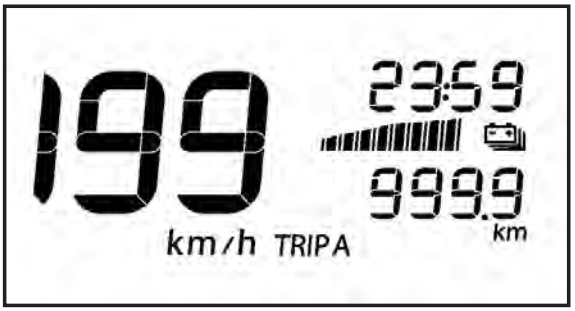

3.2.5 TRIP B

This option can be displayed scrolling by "MODE" dashboard button.
4 digits (3digits + decimal point + 1 digit), "TRIP" icon lighted and "B" on the left.
Leading zeros suppressed.
Display range from 0.0 to 999.9 km or miles.
Trip B counter counts from 0 up to 999.9 and then rolls over to 0 and continue counting.
Minimum display unit: 0.1 km or miles.
Trip B reset by pressing "SET" button more than 2 seconds.
Trip B display the Trip B ride time pressing "SET" button less than 2 seconds. Ride time is showed as an hour decimal number. Examples: 30 min is 0.5 or 1h20min is 1.3 .



3.2.6 CLOCK

Dashboard provides a clock and is displayed on LCD display. Time is obtained from internal crystal quartz and is kept while dashboard is connected to coin battery.

Clock format	If units of measure are km 24h
	If units of measure are mi12h





3.2.7 RIDE TIME

Dashboard provides a Ride Time and is displayed on LCD display. Time is obtained from internal crystal quartz and is kept with a push buttons. When the motorbike is turned on the ride time starts again.



3.2.8 UNIT OPTION DISPLAY

Dashboard provides the possibility to change the units and be displayed.

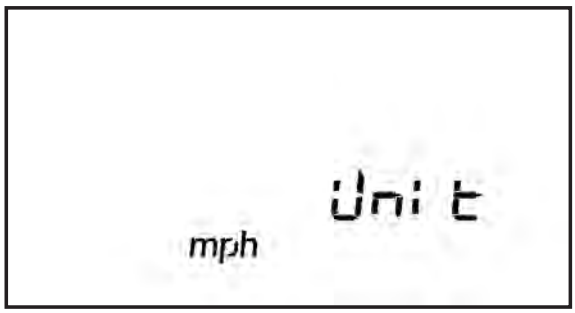

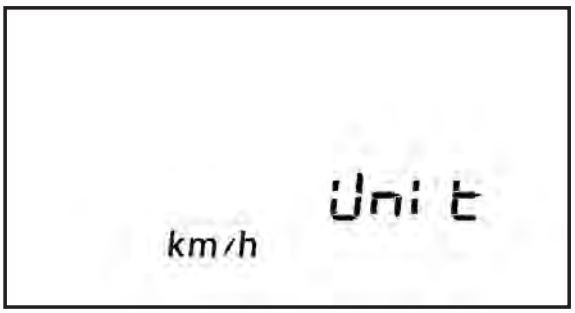

3.2.9 WHEEL LENGTH DISPLAY

Dashboard provides the possibility to change the wheel length and be displayed. The length can be selected between 2 fixed values:
2100mm (enduro)
1811mm

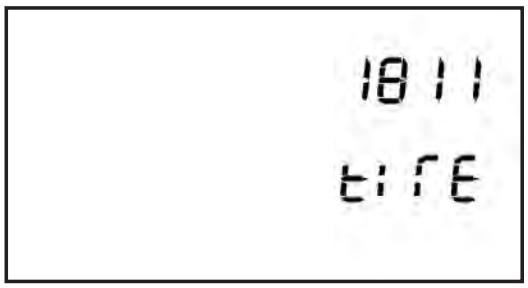

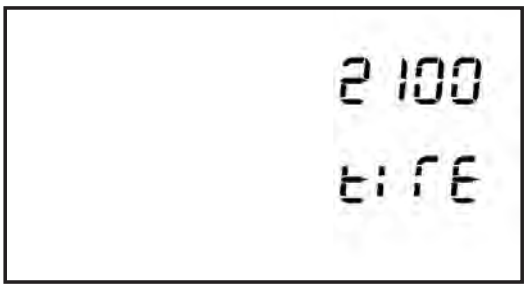

Pushing mode and set more than 2 seconds wheel length is saved. "Saved" will be displayed during 1second on Dashboard.

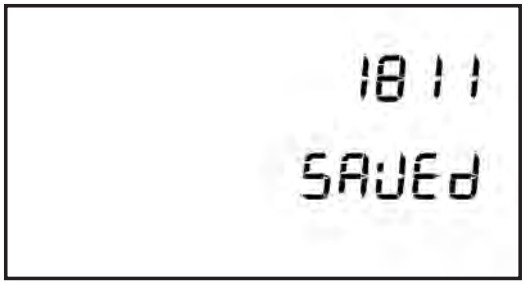

3.2.10 MOTORBIKE BATTERY LEVEL

Dashboard displays level of voltage of battery power supply:
Relationship between bars and level of voltage:

Bars	Voltage [V]	Bars	Voltage [V]
0 → 1	11	4 → 5	13
1 → 2	11.5	5 → 6	13.5
2 → 3	12	6 → 7	14
3 → 4	12.5	7 → 8	14.5

Battery level is updated every 30 seconds. Each update increase or decrease 1 bar.

WARNING:
If the word "HIGH" appears with the battery indicator flashing, turn off the engine and disconnect the battery as described on page 72.

Contact authorised BETAMOTOR customer service.

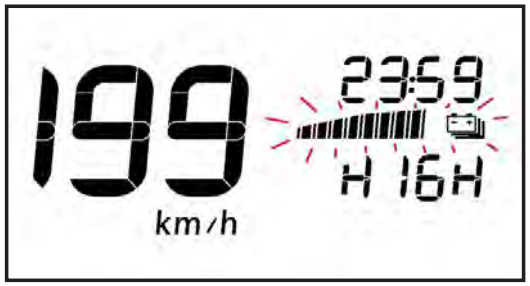

3.2.11 PUSH BUTTON MANAGEMENT TABLE

Mode	Speed	Function	Button	Time (sec)	Activity
ODO			MODE	<2	TOTAL- TRIPA - TRIPB - TOTAL
			SET	<2	Ride time- km – Ride time
	0	CLOCK MODE	MODE&SET	>2	CLOCK MODE
	0	WHEEL LENGTH	MODE	>10	WHEEL LENGTH MODE
	0		SET	>10	Km/h - mph - Km/h
TRIPA			MODE	<2	TRIPA - TRIPB - ODO - TRIPA
			SET	<2	Ride Time- Km– Ride time
			SET	>2	Reset Trip A and Ride time
	0	CLOCK MODE	MODE&SET	>2	CLOCK MODE
TRIPB			MODE	<2	TRIPB - ODO – TRIPA - TRIPB
			SET	<2	Ride Time- Km– Ride time
			SET	>2	Reset Trip A and Ride time
	0	CLOCK MODE	MODE&SET	>2	CLOCK MODE

Mode	Speed	Function	Button	Time (sec)	Activity
CLOCK MODE	0	"On Entering Stop Clock Mode"	MODE	<2	Increase in the Hour digits
			MODE	>2	Speedy increase in the Hour digits
			SET	<2	Increase in the minutes digits
			SET	>2	Speedy increase in the minutes digits
			MODE&SET	>2	Exit clock set mode and save the value
			NO ACTION	>10	Auto exit without saving

Mode	Speed	Function	Button	Time (sec)	Activity
WHEEL LENGTH	0	On entering wheel length mode	MODE	<2	Change wheel 2100 – 1811
			MODE&SET	>2	Exit wheel length mode and save the value
			NO ACTION	>10	Auto exit without saving



3.3 TELLTALES

LED number indicator:



Telltales/Indicator lights specifications:
Number of telltales: 4

LED number	Function	Symbol
LED 1	Blinkers	
LED 2	High beam	
LED 3	Oil Reserve	
LED 4	MIL telltale (Engine management system fault)	

Power +12V are provided to the dashboard only when the bike is turned on (regulator line).

Blinkers LED

The system activates the indicator in synchrony with the activation of the direction indicators

High beam LED

The system activates the indicator in synchrony with the activation of the high beam.

Oil reserve LED

MIL LED

Indicates a fault in the engine management system. In case of prolonged lighting, consult an authorised Betamotor dealer as soon as possible.
Following the initial check of the instrument, the light remains active for another two seconds.

4 COIN BATTERY

Dashboard is equipped with a coin battery (**1**) for keeping time when motorbike is off. Coin size: CR2032.

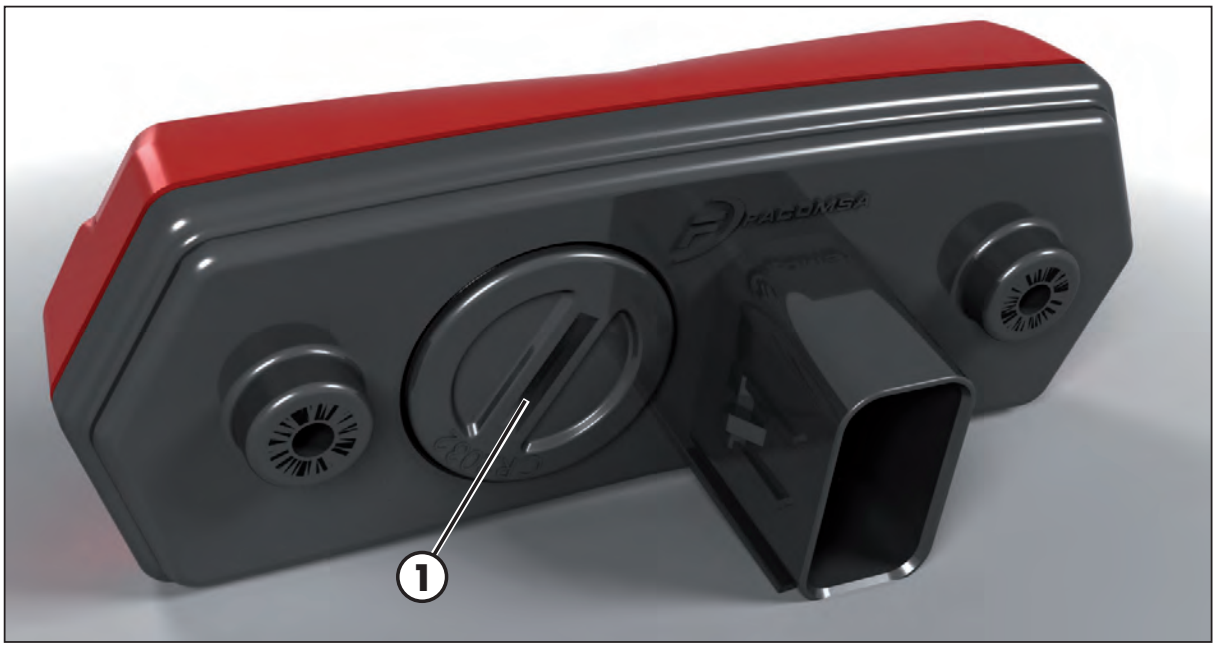

CHECKS BEFORE AND AFTER USE

For safe driving and long vehicle life you should:
1 Check the integrity of the oil pipe connecting the intake manifold to the electronic dosing.
2 Check all fluid levels.
3 Check the correct operation of the brakes and brake pad wear (page 60).
4 Check pressure, general condition and thickness of tread (page 68).
5 Check that the spokes are properly tightened.
6 Check the tensioning of the chain (page 69).
7 Check the adjustment and the operation of all the cable controls.
8 Inspect all the nuts and bolts.
9 With the engine running, check the operation of the headlight, the rear and brake lights, the indicators, the warning lights and the horn.
10 Wash the motorcycle thoroughly after off-road use (page 75).

RUNNING IN

The running-in period lasts approximately 15 hours, during which it is advisable to:
1 Make the first refuelling with a mixture of 1%.
2 Use the oil indicated on page 16 in the "Recommended lubricants and liquids" table.
3 During the first 3 hours of operation the engine should only be used to approximately 70 percent of its power. In addition, the engine speed should not exceed 7,000 rpm.
4 For the next 2 hours of operation the engine should only be used to about 90 percent of its power.
5 Use the vehicle after properly warming up the engine.
6 Avoid travelling at constant speed (changing the speed causes the different components to bed in evenly and more quickly).

This procedure should be followed each time piston, piston rings, cylinder, crankshaft or crankshaft bearings are replaced.

WARNING
Replace the transmission oil after the first 3 hours or after 15 l. of mixture.

2 REFUELLING

See page 16 for the fuel specifications.

Fuel tank capacity is shown on page 11.

To refuel open the tank cap (page 18).

After refuelling, screw the cap back and tighten securely.

WARNING
The refuelling should be performed with the engine off.


WARNING:
Fire hazard. Fuel is highly flammable.


Always stop the engine when refuelling and keep open flames and lighted cigarettes away.


Do not top up fuel while using a mobile phone.

Refuel in an open well ventilated area.

Pay special attention so that the fuel does not come into contact with hot parts of the vehicle. Immediately clean up any spilled fuel.


WARNING: Risk of poisoning.

Fuel is poisonous liquid and a health hazard.


Fuel must not come into contact with the skin, eyes, and clothing. Do not breathe in the fuel vapours. If contact occurs with the eyes, rinse immediately with plenty of water and seek medical advice. If contact occurs with skin, immediately clean contaminated areas with soap and water If fuel is swallowed, contact a doctor immediately. Change clothing that is contaminated with fuel.

WARNING: Environmental pollution hazard.

The fuel must not contaminate the ground water, the ground, or the sewage system.

OIL MIXER REFUELLING

To refuel open the tank cap (page 19).

Fuel tank capacity is shown on page 11.

After refuelling, screw the cap back and tighten securely.

Use the oil indicated on page 16 in the "Recommended lubricants and liquids" table.

STARTING THE ENGINE

Move the fuel tank valve in ON or RES position (page 18).

Check that the gears are in neutral (page 21).

Pull the clutch lever (page 19).

Close the side stand (page 21).

WHIT ELECTRIC STARTER (page 20):
Press the startup button for a max of 3 seconds. If the vehicle does not startup, wait 30 seconds before attempting a new startup.
NOTE
Pauses are needed to diffuse the generated heat and to avoid damaging the battery. If the battery is at a temperature below 15°C, the electric startup will be weak, not because the battery is deteriorated but because it needs to be warmed up. Therefore, with temperatures below 15°C, several startup attempts may be necessary to heat the battery and thereby increase the battery power provided by the battery.

Do not press the button while the engine is running.

WITH KICK-STARTER (OPTIONAL) (page 21):
Depress the kick-starter with a sharp movement of the foot.



ATTENTION
Once the pedal has been depressed, release it immediately. This avoids jolts to the entire ignition group and to the foot.

COLD STARTING:
Operate the starter (page 19), start the vehicle as described above, wait a few seconds, then move the starter back to its starting position.

ENGINE SHUT-DOWN

To shut-down the engine press the button  on the left switch unit (page 20).

NOTE:
With the engine off, make sure the fuel cock is set to OFF (page 18).

CHAPTER 3 ADJUSTMENTS

CONTENTS

Key to symbols....38
Brakes....38
Front brake....38
Rear brake....38
Clutch....38
Adjustment of gas clearance....39
Adjusting the idle speed....39
Carburetor settings according to the working conditions....40
Exhaust valve control adjustment....43
Handlebar adjustment....43
U-bolt position adjustment....43
Adjustment of the handlebar position....44
Adjusting fork....44
Adjusting the rebound damper....44
Adjusting the compression damper....45
Adjusting the spring preload....45
Shock absorber....45
Adjusting the rebound damper....45
Adjusting the spring preload....46
Adjusting the hydraulic compression damper (high and low speeds)....46
Static sag load test....47
Suspensions settings according to the weight of the rider....47

KEY TO SYMBOLS

Tightening torque

Threadlocker Medium

Grease

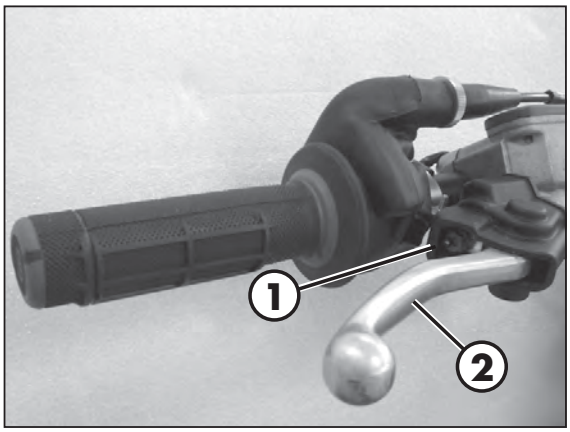

BRAKES

FRONT BRAKE

The front brake is disk type with hydraulic control.

The home position of brake lever **2** can be adjusted by means of screw **1**.

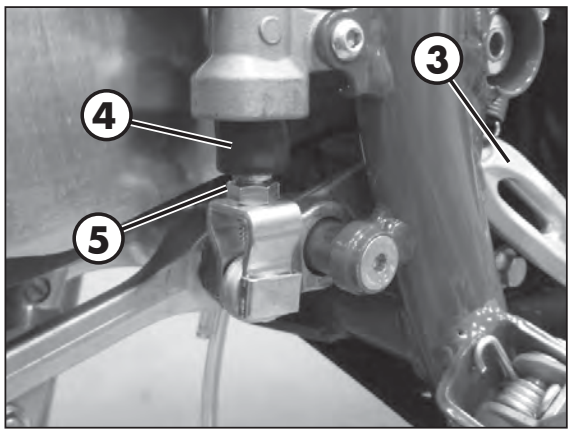

REAR BRAKE

The home position of brake pedal **3** can be altered by turning adjusting screw **5** after loosening the counternut located under dust cap **4**. Loosen the counternut and turn the adjusting screw until the desired height is obtained. Retighten the counternut after completing the operation.

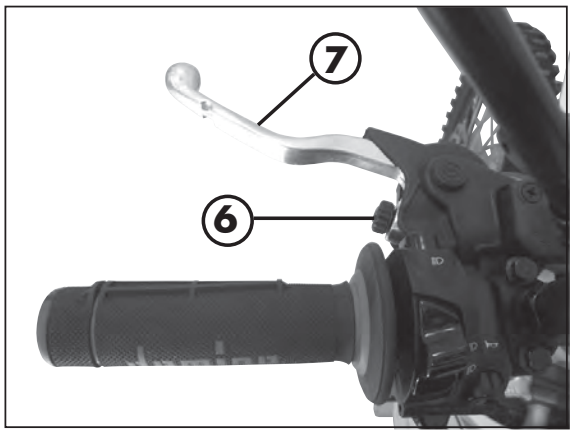

CLUTCH

The adjustment screw **6** allows adjustment of the distance of lever **7** from the knob. The empty run is recovered automatically.

ADJUSTMENT OF GAS CLEARANCE

The throttle control cable should always have a 3-5 mm play. In addition, the idle speed should not change when the handlebars are fully rotated to the left or right. Push back protective cap **1**. Loosen counternut **2** and turn adjusting screw **3**. Tighten the counternut and check that the throttle twist grip turns smoothly.

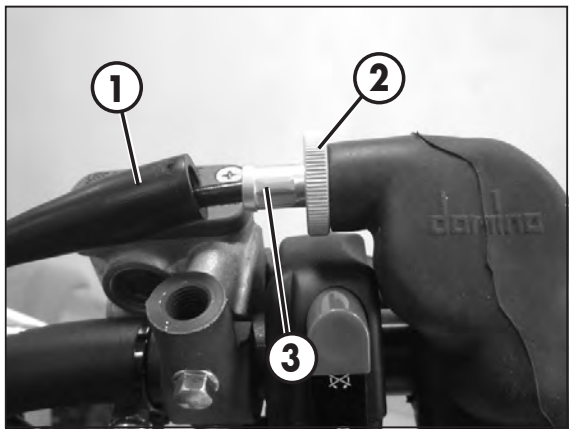

ADJUSTING THE IDLE SPEED

Idling adjustment greatly affects the appropriate start-up and the accelerator response.
Idling is adjusted through adjustment screw **1** and air adjustment screw **2**. Adjustment screw **1** adjusts the basis position of the gas valve. Turn the screw clockwise to increase the rotation conditions and counterclockwise to diminish it. The air adjustment screw **2** adjusts the quantity of which is mixed to the fuel for idling. If the screw is turned counterclockwise, the quantity of air increases (thin mix), if turned clockwise, the quantity of air diminishes (fat mix).

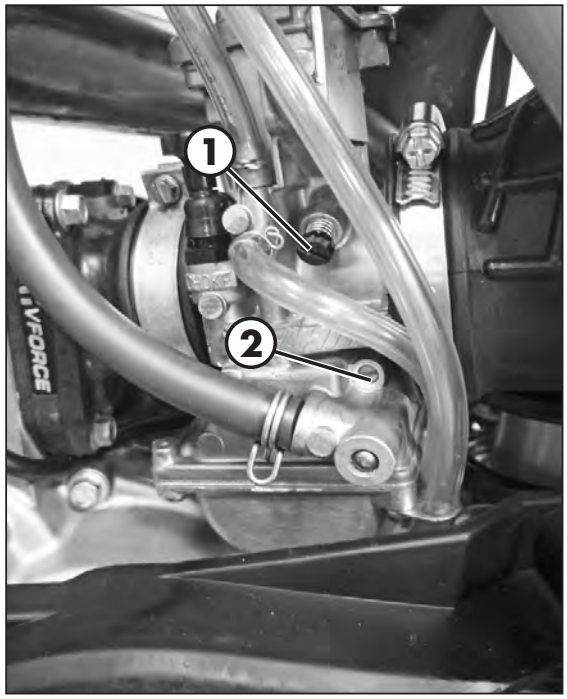

To properly adjust the idle speed, follow these steps:

• Tighten the air adjustment screw no. 2 fully and then loosen it up to the value described in the carburetor setting table (page 13)

• Warm the engine for approx. 5 minutes, until the operational temperature is attained.

• Slowly turn the air adjustment screw **2** clockwise, until idling starts diminishing.

• Mark the position, then slowly turn the air adjustment screw no. **2** counterclockwise, until idling decreases again.

• Adjust the screw between these two positions, at the highest idling point..

If a remarkable increase in the rpm occurred during the adjustment above, idling is to be reduced and taken back to the normal level, and then execute the above procedure.

If no satisfactory results are obtained after the procedure, this may be due to an incorrect slow-running jet.

If the air adjustment screw has been thoroughly tightened, but the rpm have not varied, a lower size slow-running jet is to be used.

Execute the adjustment procedure again after replacing the jet.

NOTE:
The correct idling should be between 1700 and 1800 rpm.

CARBURETOR SETTINGS ACCORDING TO THE WORKING CONDITIONS

See the following tables to adjust the carburetor settings according to ambient temperature and altitude.

Legend:

SLM	Above sea level
AVA	Air screw opening (from all closed)
Gm	Slow jet
SPL	Needle
POS	Needle position (from top)
GM	Main jet
VLV	Valve

Standard settings

Version RR 250							
Altitude (SLM)	Carburetor setting	Ambient temperature					
		-20°C÷ ÷-7°C	-6°C÷ 5°C	6°C ÷ 15°C	16°C ÷ 24°C	25°C ÷ 36°C	37°C ÷ 49°C
		-2°F ÷ 20°F	19°F ÷ 41°F	42°F ÷ 60°F	61°F ÷ 78°F	79°F ÷ 98°F	99°F ÷ 120°F
3000 m	AVA	1,25	1,75	1,75	2,25	2,25	
10000 ft	Gm	38	35	35	35	35	
⬆	GM	165	162	160	158	155	
	SPL	NOZJ	NOZJ	NOZK	NOZK	NOZK	
2301 m	POS	3	3	2	2	2	
7501 ft	VLV	7	7	7	7	7,5	
2300 m	AVA	1,25	1,25	1,75	1,75	2,25	2,25
7500 ft	Gm	38	38	358	38	38	38
⬆	GM	168	165	162	160	158	155
	SPL	NOZJ	NOZJ	NOZJ	NOZK	NOZK	NOZK
1501 m	POS	3	3	3	2	2	2
5001 ft	VLV	7	7	7	7	7	7,5
1500 m	AVA	1,25	1,25	1,25	1,75	1,75	2,25
5000 ft	Gm	40	38	38	38	38	38
⬆	GM	170	168	165	162	160	158
	SPL	NOZI	NOZJ	NOZJ	NOZJ	NOZK	NOZK
751 m	POS	4	3	3	3	2	2
2501 ft	VLV	7	7	7	7	7	7
750 m	AVA	1,25	1,25	1,25	1,25	1,75	1,75
2500 ft	Gm	40	40	38	38	38	38
⬆	GM	172	170	168	165	162	160
	SPL	NOZI	NOZI	NOZJ	NOZJ	NOZJ	NOZK
301 m	POS	4	4	3	3	3	2
1001 ft	VLV	7	7	7	7	7	7
300 m	AVA	0,75	1,25	1,25	1,25	1,25	1,75
1000 ft	Gm	42	40	40	38	38	38
⬆	GM	175	172	170	168	165	162
	SPL	NOZH	NOZI	NOZI	NOZJ	NOZJ	NOZJ
0 m	POS	5	4	4	3	3	3
0 ft	VLV	7	7	7	7	7	7

Version RR 300							
Altitude (SLM)	Carburetor setting	Ambient temperature					
		-20°C ÷-7°C	-6°C÷ 5°C	6°C ÷ 15°C	16°C ÷ 24°C	25°C ÷ 36°C	37°C ÷ 49°C
		-2°F ÷ 20°F	19°F ÷ 41°F	42°F ÷ 60°F	61°F ÷ 78°F	79°F ÷ 98°F	99°F ÷ 120°F
3000 m	AVA	1,25	1,75	1,75	2,25	2,25	
10000 ft	Gm	38	38	38	35	35	
⬆	GM	165	162	160	158	155	
	SPL	N2ZW	N2ZJ	N2ZJ	N2ZK	N2ZK	
2301 m	POS	2	2	2	1	1	
7501 ft	VLV	7	7	7	7	7	
2300 m	AVA	1,25	1,25	1,75	1,75	2,25	2,25
7500 ft	Gm	38	38	38	38	35	35
⬆	GM	168	165	162	160	158	155
	SPL	N2ZW	N2ZW	N2ZJ	N2ZJ	N2ZK	N2ZK
1501 m	POS	2	2	2	2	1	1
5001 ft	VLV	7	7	7	7	7	7
1500 m	AVA	1,25	1,25	1,25	1,75	1,75	2,25
5000 ft	Gm	38	38	38	38	38	35
⬆	GM	170	168	165	162	160	158
	SPL	N2ZH	N2ZW	N2ZW	N2ZJ	N2ZJ	N2ZK
751 m	POS	3	2	2	2	2	1
2501 ft	VLV	7	7	7	7	7	7
750 m	AVA	1,25	1,25	1,25	1,25	1,75	1,75
2500 ft	Gm	40	38	38	38	38	38
⬆	GM	172	170	168	165	162	160
	SPL	N2ZH	N2ZH	N2ZW	N2ZW	N2ZJ	N2ZJ
301 m	POS	4	3	2	2	2	2
1001 ft	VLV	7	7	7	7	7	7
300 m	AVA	0,75	1,25	1,25	1,25	1,25	1,75
1000 ft	Gm	40	40	38	38	38	38
⬆	GM	175	172	170	168	165	162
	SPL	N2ZG	N2ZH	N2ZH	N2ZW	N2ZW	N2ZJ
0 m	POS	4	4	3	2	2	2
0 ft	VLV	7	7	7	7	7	7

EXHAUST VALVE CONTROL ADJUSTMENT

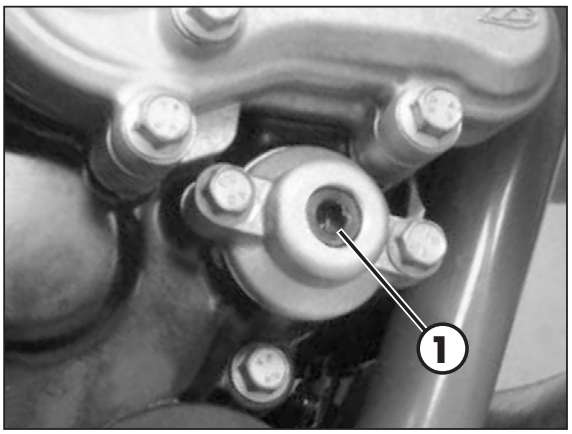

ATTENTION! The vehicle is provided with an exhaust valve whose fine tuning is performed during the final try-out of the engine.

Turn IN [clockwise] for softer power delivery
Turn Out [counter-clockwise] for a harder "hit"

HANDLEBAR ADJUSTMENT

U-BOLT POSITION ADJUSTMENT

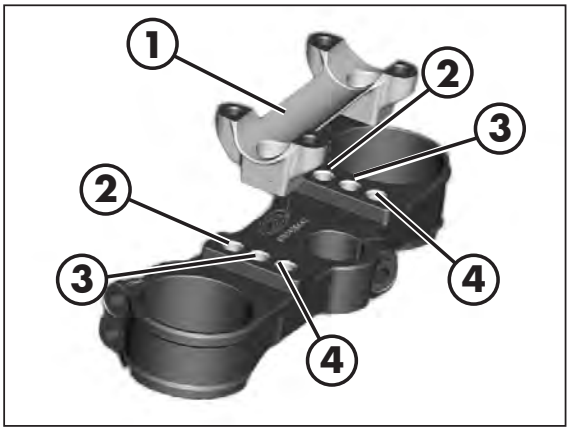

The lower bracket **1** can be mounted in correspondence of the holes nr. **2**, **3** or **4** respectively.

To adjust the position of the u-bolt remove the screws shown in the figure.

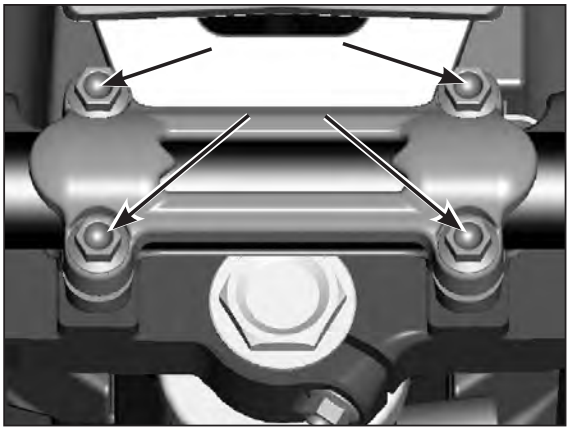

Remove the handlebar.

Remove the screws **5**.

Position the U-bolt according to requirements.

At the end refit the screws **5** after the application of thread lock fluid and tighten to the torque indicated.

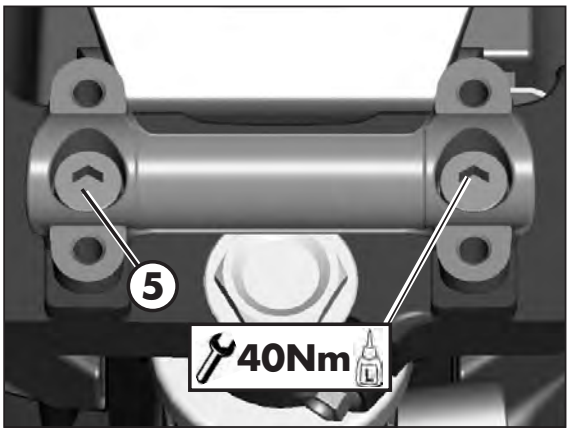

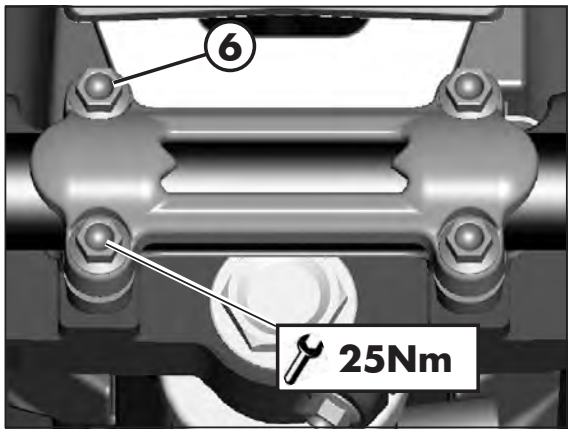

Apply the handlebar.

Apply the top u-bolt.

Refit the screws **6**. Tighten to the torque indicated.

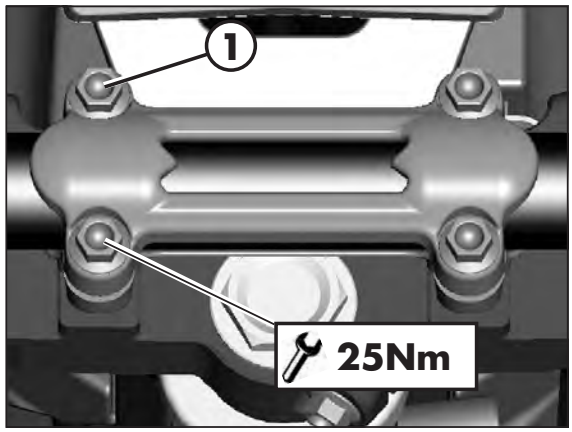

ADJUSTMENT OF THE HANDLEBAR POSITION

The handlebar can be adjusted by rotating it back and forth.

To adjust the handlebar loosen screws **1**.

Position the handlebar according to requirements.

Tighten to the torque indicated.

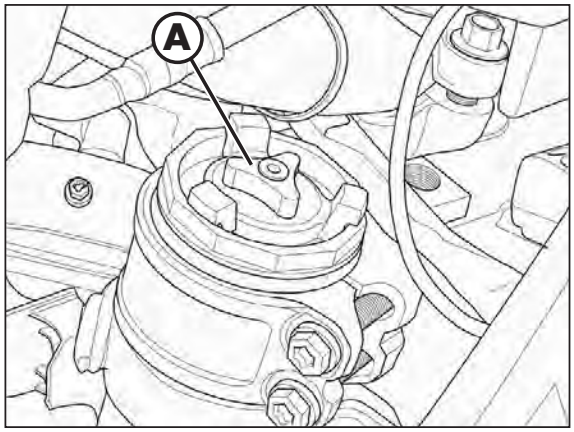

ADJUSTING FORK

ADJUSTING THE REBOUND DAMPER

The hydraulic rebound damper determines the behaviour of the telescopic fork during extension and can be adjusted by means of knob **A**. Turning the screw clockwise (towards +) increases the action of the rebound damper; turning it anticlockwise (towards -) decreases the action of the rebound damper.

For standard calibration, refer to page 12.

ADJUSTING THE SPRING PRELOAD

The spring preload is adjusted by using the ring nut **B**. Rotate clockwise to increase the spring preload or anticlockwise to decrease it.

The spring preload varies by one millimeter, each complete revolution.

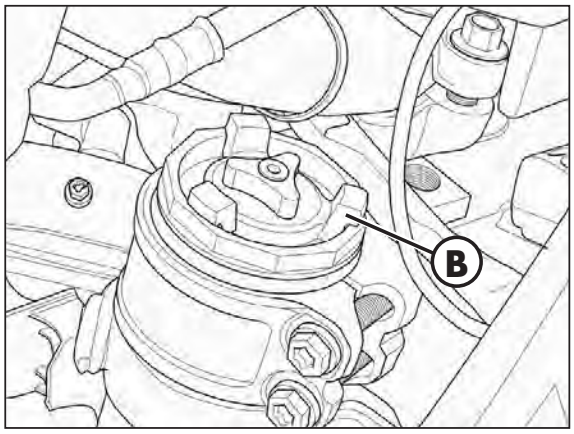

ADJUSTING THE COMPRESSION DAMPER

The hydraulic compression damper determines the behaviour of the telescopic fork during compression and can be adjusted by means of knob **C** located at the lower end of the fork legs. Turning the screw clockwise (towards +) increases the action of the compression damper; turning it anticlockwise (towards -) decreases the action of the compression damper.

For standard calibration, refer to page 12.

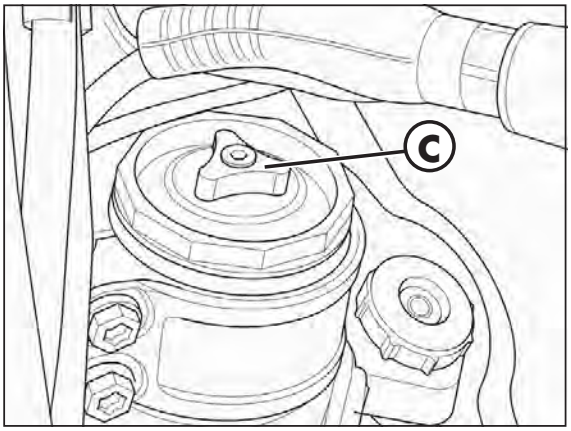

SHOCK ABSORBER

ADJUSTING THE REBOUND DAMPER

Turn screw **A** to adjust the hydraulic rebound damper.

Turning the screw anticlockwise (out) decreases the damping effect.

For standard setting, refer to page 12.

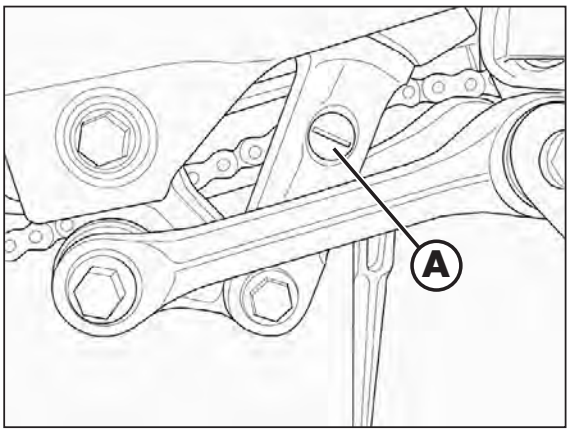

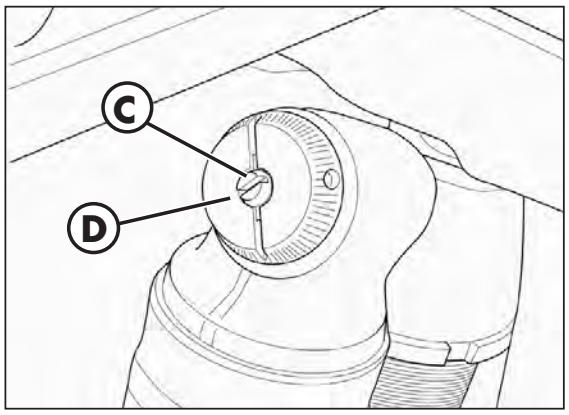

ADJUSTING THE HYDRAULIC COMPRESSION DAMPER (HIGH AND LOW SPEEDS)

Adjustment for low compression speed:
- Using a screwdriver, loosen screw **C** by turning it clockwise to increase the hydraulic compression damper.

For standard setting, refer to page 12.

Adjustment for high compression speed:
- Turn knob **D** anticlockwise to decrease the hydraulic compression damper.

For standard setting, refer to page 12.

WARNING:
Starting from the standard position, turn the knob anticlockwise (with a closing action), the center screw will have an integral movement, then will rotate with the knob.

For standard setting, refer to page 12.

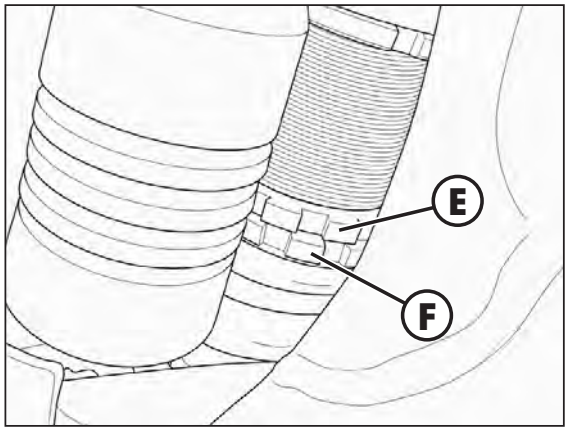

ADJUSTING THE SPRING PRELOAD

Loosen counter-ring **E**, rotate ring **F** clockwise to increase the spring preload (and consequently the shock absorber preload) or anticlockwise to decrease it. After obtaining the desired preload, turn counter-ring **E** until it stops against adjusting ring **F**.

For standard setting, refer to page 12.

NOTE: for the handling of ring nuts use the specific wrench provided in the standard tool kit shown in the figure.



STATIC SAG LOAD TEST

To verify the static sag of the shock absorber proceed as follows:
- Place the motorcycle on the work stand.
- Measure the vertical distance between the rear wheel axle and a reference point on the rear fairings.
- Write down the dimension H_1.
- Remove the work stand.
- Keep the motorcycle in vertical position and measure again the distance between the wheel axle and the reference point previously established.
- Write down the dimension H_2.

Verify that the value of the static compression $X = H_1 - H_2$ matches the one shown on page 12. Otherwise, perform the adjustment of the spring preload as described above.

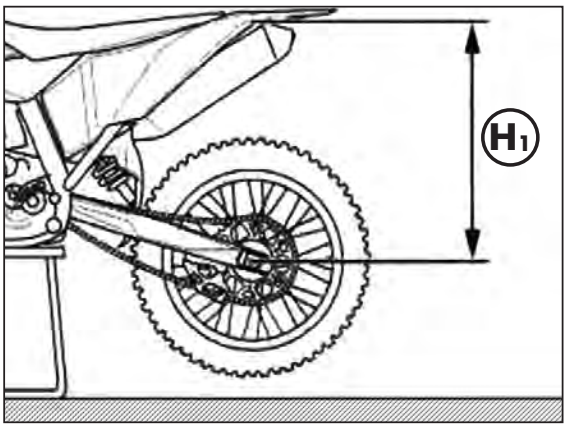

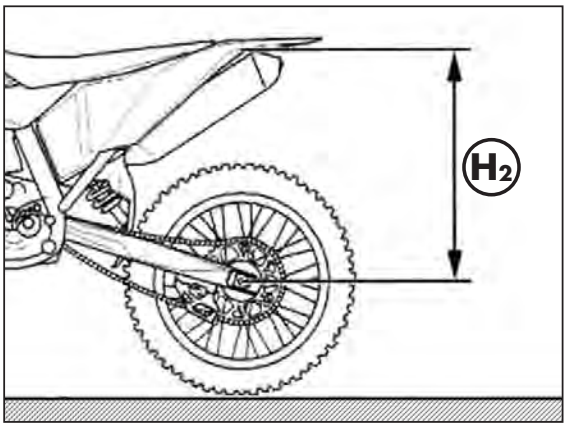

SUSPENSIONS SETTINGS ACCORDING TO THE WEIGHT OF THE RIDER

The table below shows the spring constant K of the suspensions (fork and shock absorber) depending on the weight of the driver.
Refer to the accessories catalogue Betamotor to obtain the spring codes.

Fork	
Rider weight [kg]	K (Spring constant)
70 - 85	4,2
85 - 95	4,6
95 - 105	4,8
>105	5

Shock absorber	
Rider weight [kg]	K (Spring constant)
< 60	4,8
60 -70	5
70 - 80	5,2
80 - 90	5,4
90 - 100	5,6
>100	5,8

Standard settings

CHAPTER 4 CHECKS AND MAINTENANCE

CONTENTS

Key to symbols....50
Engine oil....50
Check the level....50
Replacement....50
Liquid coolant....51
Check the level....51
Replacement....52
Air filter....54
Removing and installing air filter....54
Air filter cleaning - RR 250/300 Europa....55
Air filter cleaning - RR 250/300....55
Spark plug....55
Carburettor....56
Draining the carburettor float chamber....56
Checking the float level....57
Front brake....58
Check the level of the front brake fluid....58
Restoring the level of the front brake fluid....58
Bleeding the front brake....59
Front brake lining control....60
Brake disc thickness control....60
Rear brake....61
Check the level of the rear brake fluid....61
Restoring the level of the rear brake fluid....61
Bleeding the rear brake....62
Rear brake lining control....63
Brake disc thickness control....63
Clutch control....64
Check the level....64
Bleeding....65
Check and adjusting of steering play....66
Fork....67
Front wheel....67
Tightening....67
Tyres....68
Rear suspension leverage....68
Chain....69
Check and adjust tightening chain....69
Check for chain wear....70
Headlight....71
Replacing the headlight bulbs....71
Tail light....71
Battery....72
Battery removal....72
Battery assembly....73
Inactivity....73
Charging the battery....74
Fuses....74
Cleaning the vehicle....75
General precautions....75
Prolonged inactivity....76
Scheduled maintenance vehicle....77
Tightening torque overview....79

KEY TO SYMBOLS

Tightening torque

Threadlocker Medium

Grease

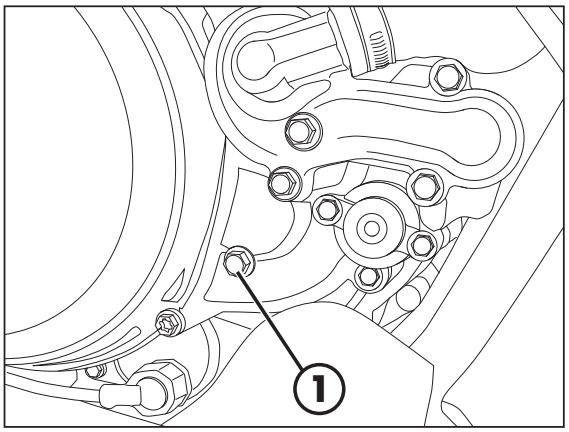

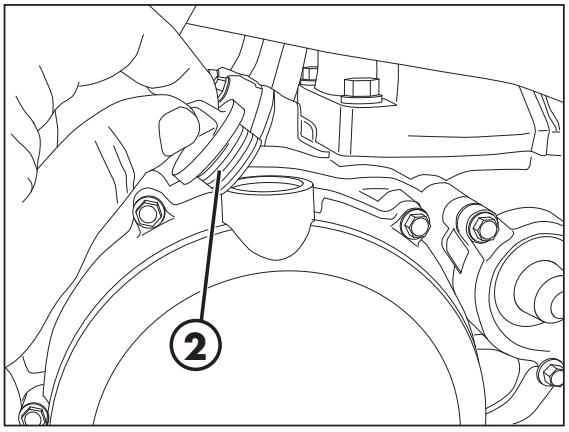

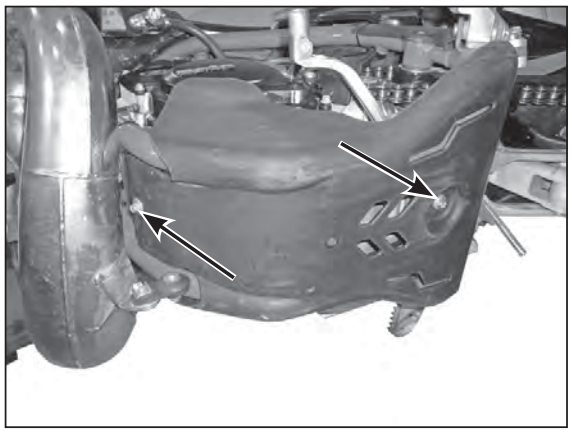

ENGINE OIL

CHECK THE LEVEL

Hold the vehicle upright.
Position the drive on a flat base ensuring stability.

Remove the inspection cap **1**.

The oil level must arrive to the lower edge of check hole.

Otherwise restore the oil level through plug **2**.

The inspection cap is ONLY to check the oil level. For the oil drain, refer to the paragarafo Replacement.

Use the oil indicated on page 16 in the "Recommended lubricants and liquids" table.

REPLACEMENT

Always perform the replacement when engine is hot:
- Position the drive on a flat base ensuring stability.
- Remove the engine casing by loosening the screws shown in the figure.
- Place a container under the engine.

WARNING:
Hot oil can cause severe burns!

- Unscrew filler plug **1** and drain plug **2**.
- Drain all the oil from the crankcase.
- Place the cap **2** and tighten to specified torque.

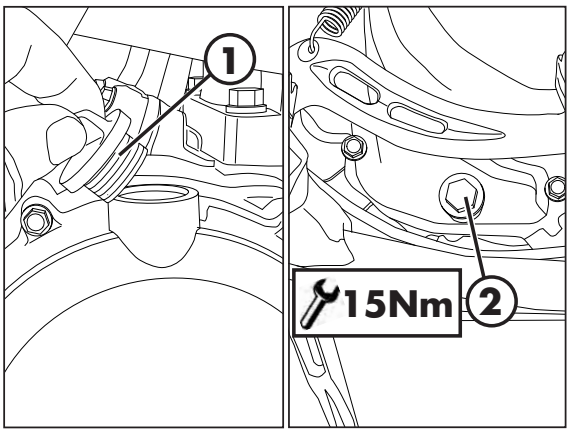

Pour in the quantity of liquid indicated on page 16.
Use the oil indicated on page 16 in the "Recommended lubricants and liquids" table.

Screw on filler cap **1** again.

WARNING:
Dispose of used oil in compliance with the regulations in force.

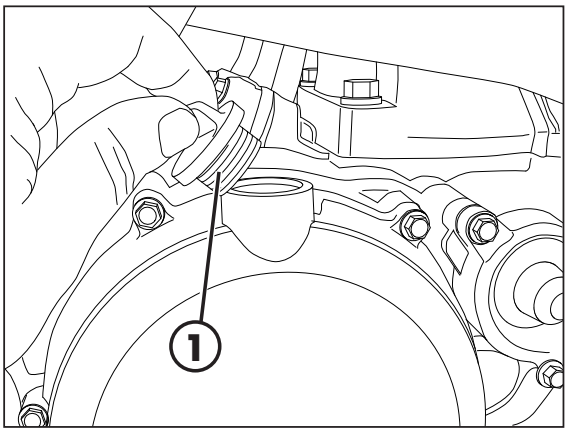

LIQUID COOLANT

CHECK THE LEVEL

Keep the vehicle in vertical position relative to the ground.

The level of the coolant must be checked when the engine is cold. Use the following procedure:

- Unscrew cap **1** and ensure that the liquid is visible in the lower portion of the loading tube.

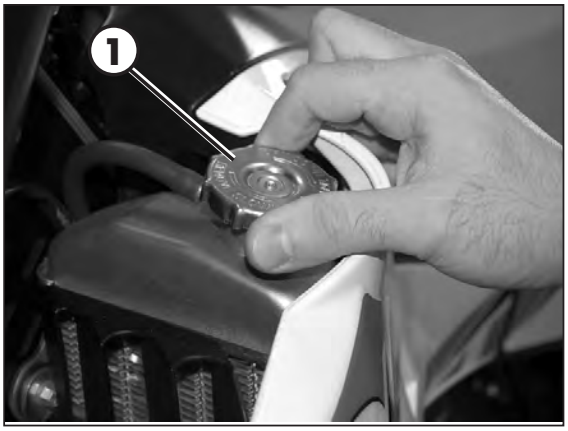

- In the case in which the liquid is not visible remove the vent screw **2** and proceed topping up.

- At the end of operation refit the filler cap and the vent screw.



Use the oil indicated on page 16 in the "Recommended lubricants and liquids" table.

⚠ WARNING: Never unscrew the filler cap of the radiator when the engine is hot. Danger of burning!

WARNING:
Wear appropriate protective clothing and protection gloves.

Keep coolant out of reach of children.

Avoid any direct contact of the coolant with skin, eyes or clothing. If this happens:

- with the eyes, rinse immediately with plenty of water and seek medical advice;
- with skin, Immediately clean contaminated areas with soap and water Change clothing that is contaminated with coolant.

If coolant is swallowed, contact a doctor immediately.

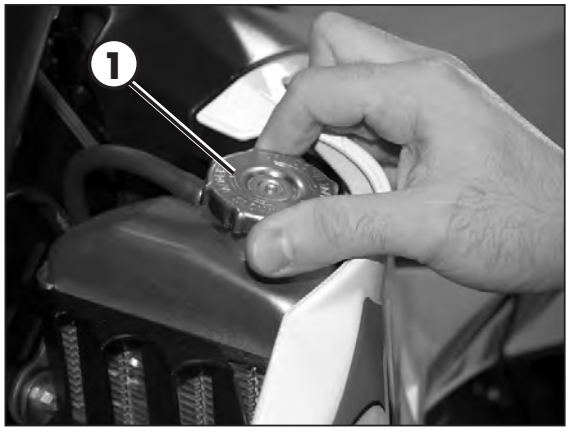

REPLACEMENT

Keep the vehicle in vertical position relative to the ground.

Replacement of the coolant must take place when the engine is cold.

- Unscrew cap **1**.

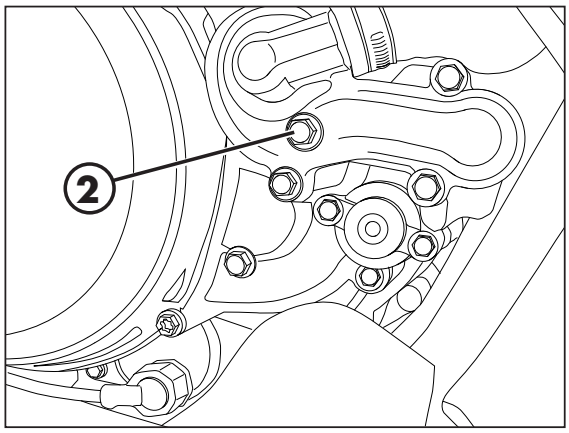

- Place a container under screw **2**.
- Unscrew the screw **2**.
- Drain the liquid.
- Tighten screw **2** applying the specific washer.

- Unscrew drain screw **3**.

- Proceed to filling.

- Reapply the loading cap and the bleeding screw.

The amounts of liquid are shown on page 16.

Use the liquid indicated on a page 16 in the "Recommended lubricants and liquids" table.



WARNING:
Never unscrew the filler cap of the radiator when the engine is hot. Danger of burning!

WARNING:
Wear appropriate protective clothing and protection gloves.

Keep coolant out of reach of children.

Avoid any direct contact of the coolant with skin, eyes or clothing. If this happens:

- with the eyes, rinse immediately with plenty of water and seek medical advice;
- with skin, Immediately clean contaminated areas with soap and water Change clothing that is contaminated with coolant.

If coolant is swallowed, contact a doctor immediately.

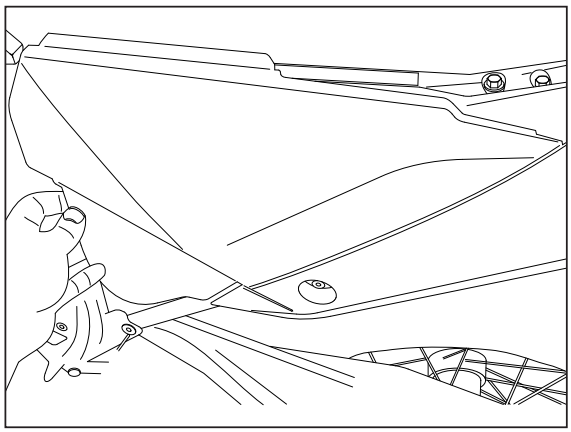

AIR FILTER

Check after every ride.

REMOVING AND INSTALLING AIR FILTER

To access the filter is necessary:
•Remove the saddle (page 82).
•Pull the cover air filter (page 83).

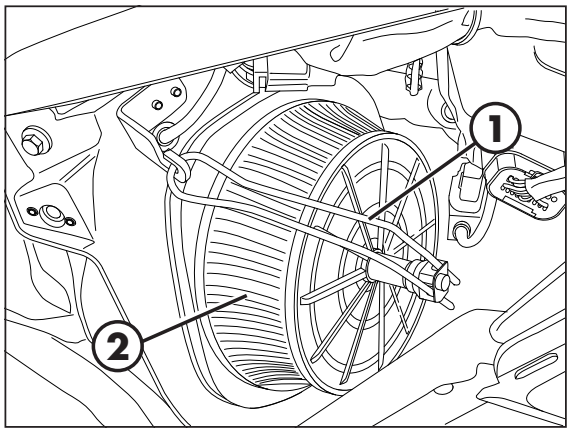

•Release filter fastener **1**.

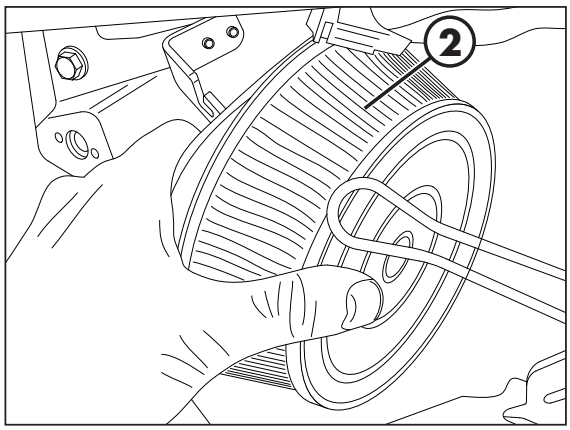

•Pull out air filter **2**.

WARNING:
After every intervention, check that nothing has been left inside the filter box.

NOTE:
If the filter is damaged, replace it immediately.
To replace, contact authorised Beta-motor customer service.

WARNING:
Never use the vehicle if the air filter is not in place. The infiltration of dust and dirt can cause damage and considerable wear.

WARNING:
After every intervention, check that nothing has been left inside the filter box.

Reassemble by performing the operations in reverse order.

AIR FILTER CLEANING - RR 250/300 EUROPA

Blow the filter with compressed air.

AIR FILTER CLEANING - RR 250/300

- Thoroughly wash the filter with water and soap.
- Dry the filter.
- Wet the filter with filter oil and then remove the excess oil to prevent it from dripping.

SPARK PLUG

Keeping the spark plug in good condition will reduce fuel consumption and increase engine performance.

To accede to spark plug, is necessary to take off the fuel tank with side fairings (page 83).

To perform the check, just extract the spark plug cap and unscrew the spark plug by means of the provided wrench.
Carefully clean the electrodes using a wire brush. Blow the spark plug with compressed air to prevent any residues from getting into the engine.

Examine the distance between the electrodes with a feeler. This distance should be from 0,5 - 0,6 mm. If it is not, it may be corrected by bending the earth electrode.

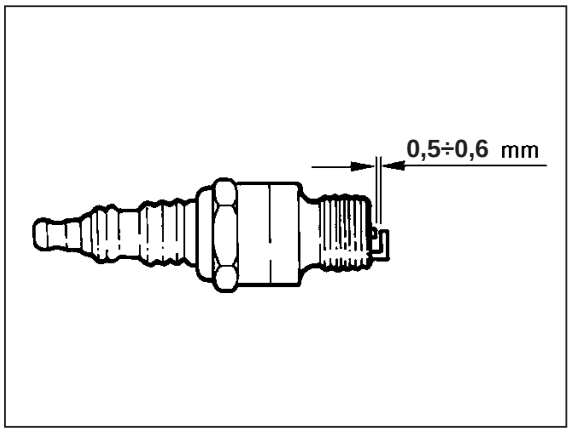

The spark plug may appear:
black ■ "fat" carburation
light brown ■ appropriate carburation
white □ "thin" carburation

Check as well that there are no cracks in the insulation or corroded electrodes. If so, replace immediately.
Lubricate the spark plug thread, and then (when the engine is cold) screw in the spark plug by hand to its abutting end. Finally tighten the spark plug with the spanner.

WARNING:
Do not check while the engine is hot.

CARBURETTOR

DRAINING THE CARBURETTOR FLOAT CHAMBER

If the carburettor tank needs to be emptied, proceed as described.

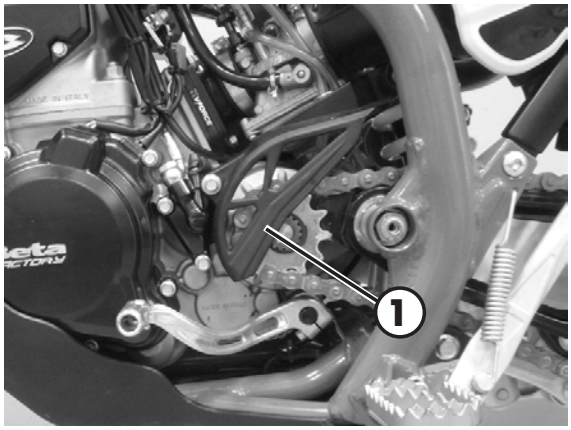

Remove the chain protection **1**, close the tank tap and put a cloth under the carburettor, so that you can collect the running out fuel.

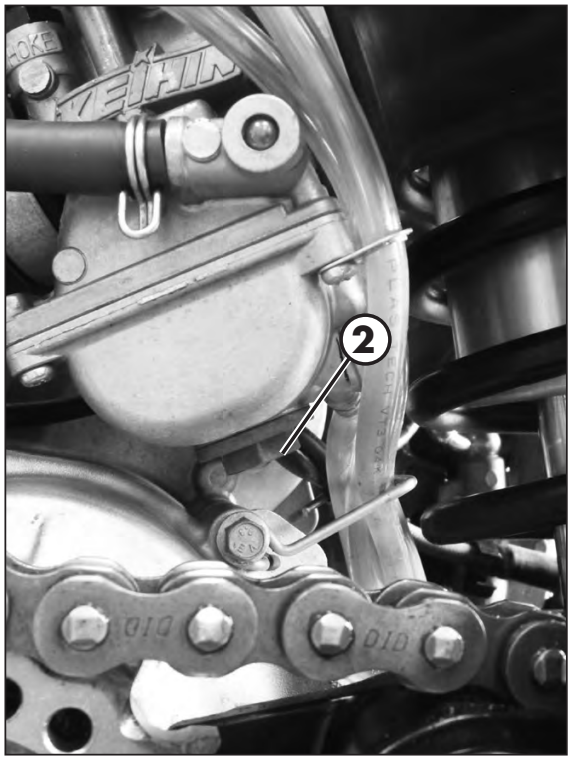

Open the drain screw **2** to drain the fuel.
Close the drain screw.
Apply the chain protection and tighten the screws at 10Nm.

WARNING:
Follow action on a cold engine.

WARNING:
Fire hazard. Fuel is highly flammable.

Always stop the engine when refuelling and keep open flames and lighted cigarettes away.

Refuel in an open well ventilated area.

Immediately clean up any spilled fuel.

WARNING:
Risk of poisoning!
Fuel is poisonous liquid and a health hazard.
Wear appropriate protective clothing and protection gloves.

Fuel must not come into contact with the skin, eyes, and clothing. Do not breathe in the fuel vapours. If contact occurs with the eyes, rinse immediately with plenty of water and seek medical advice. If contact occurs with skin, immediately clean contaminated areas with soap and water If fuel is swallowed, contact a doctor immediately. Change clothing that is contaminated with fuel.

WARNING:
Environmental pollution hazard!
The fuel must not contaminate the ground water, the ground, or the sewage system.

CHECKING THE FLOAT LEVEL

Remove the carburettor from the vehicle after following the procedure for emptying the carburettor bowl (page 56)

Remove the float chamber.

Keep the carburettor on a 60° approx. inclined, so that float leans on the needle valve without pressing it.
In this position the float edge should be parallel with the float chamber sealing surface (see figure).
If the float height does not correspond to the nominal value, check the float needle valve and if necessary replace it.
If the needle valve is in working order, adjust the float height by bending float lever **1**.
Assemble the carburettor tank, assemble the carburettor and check idling.

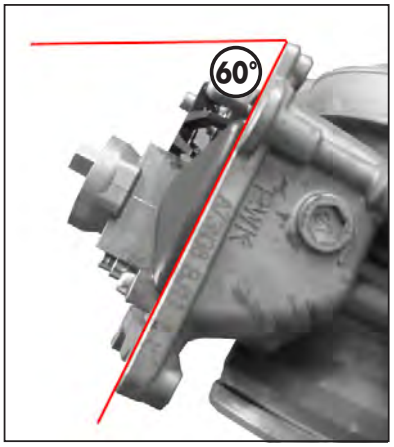

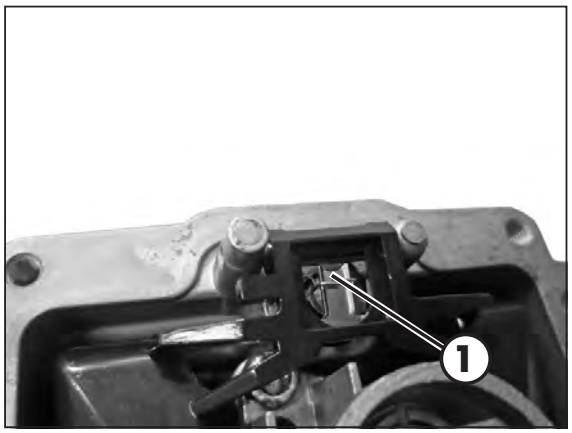

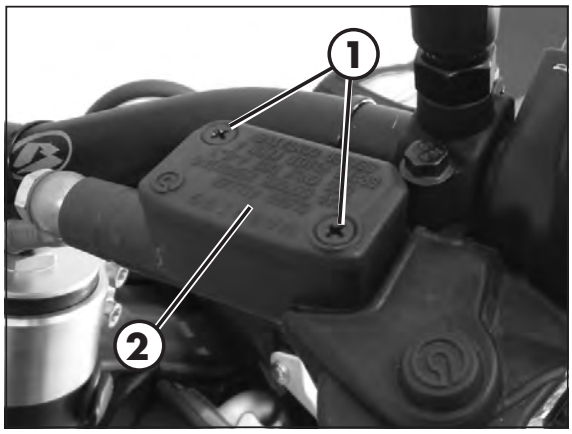

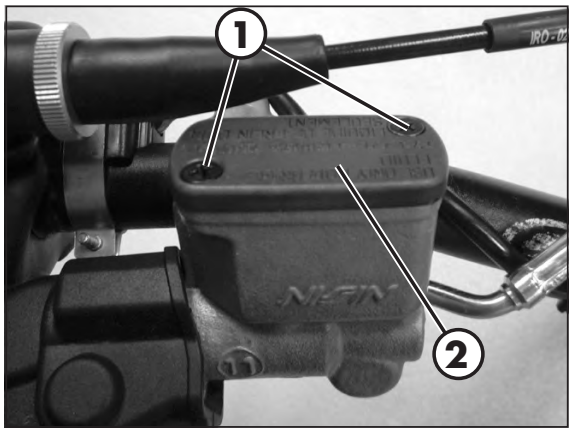

FRONT BRAKE

CHECK THE LEVEL OF THE FRONT BRAKE FLUID

Check the level of the brake fluid through sight **A**. The level of the fluid should never fall below the mark in the sight.

RESTORING THE LEVEL OF THE FRONT BRAKE FLUID

To restore the level of the brake fluid, loosen the two screws **1**, lift cap **2** and add brake fluid until its level is 5 mm below the upper rim of the reservoir.

Use the liquid indicated on page 16 in the "Recommended lubricants and liquids" table.

WARNING:
The clutch fluid is extremely corrosive. Take care not to spill it on the paintwork.

Wear appropriate protective clothing and protection gloves.

Keep coolant out of reach of children.

WARNING: Avoid any direct contact of the liquid with skin, eyes or clothing. If this happens:

- with the eyes, rinse immediately with plenty of water and seek medical advice.
- with skin, immediately clean contaminated areas with soap and water. Change clothing that is contaminated with liquid.

If liquid is swallowed, contact a doctor immediately.

BLEEDING THE FRONT BRAKE

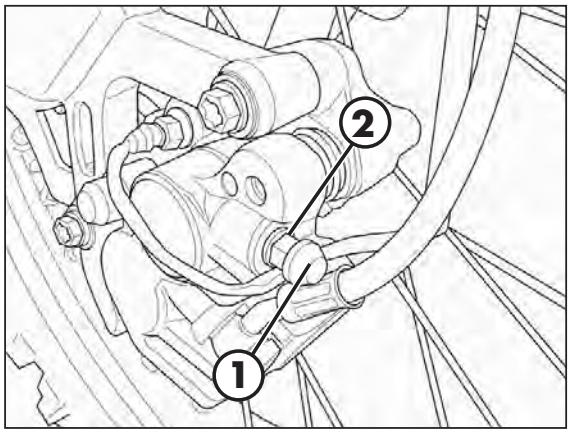

To bleed air from the front brake circuit, proceed as follows:

- Remove the rubber cap **1** from the valve **2**.
- Open the sump cap.
- Place one end of a small transparent tube into the valve **2**, and the other end inside a container.
- Pump with the brake lever 2/3 times and keep the lever pressed.
- Unscrew the valve and let the oil drain.
- If are still visible in the tube repeat above operation until obtaining a continuous outflow of oil within no air bubbles.
- Close the valve and release the lever.

NOTE:
during this procedure, continuously top up the brake pump thank to replace the oil that is out flowing.

- Remove the tube.
- Replace the rubber cap.
- Close the oil reservoir cap.

Use the liquid indicated on page 16 in the "Recommended lubricants and liquids" table.


WARNING:
The brake fluid is extremely corrosive. Take care not to spill it on the paintwork.


Wear appropriate protective clothing and protection gloves.


Keep coolant out of reach of children.


WARNING: Avoid any direct contact of the liquid with skin, eyes or clothing. If this happens:

- with the eyes, rinse immediately with plenty of water and seek medical advice.
- with skin, immediately clean contaminated areas with soap and water. Change clothing that is contaminated with liquid.

If liquid is swallowed, contact a doctor immediately.

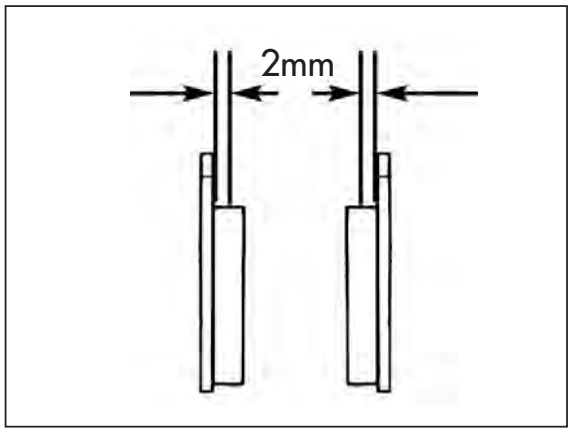

FRONT BRAKE LINING CONTROL

In order to verify the wear condition of front brake is enough to view the caliper from the bottom, where is possible to glimpse the brake lining tails which will have to show a brake of 2 mm in thickness. If the stratum is lesser let's start replacing them.

Note:
Perform the check according to the times shown in the table on page 77.

To replace, contact authorised Betamotor customer service.

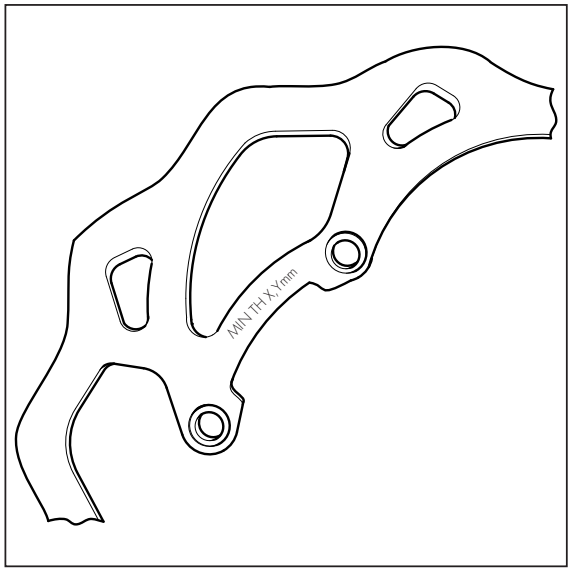

BRAKE DISC THICKNESS CONTROL

Periodically verify disc condition. In case signs of damage , veins, or deformations are present, proceed with replacement.
Verify disc thickness. The minimum thickness is engraved on the disc.
Once the limit is in proximity or has been reached, proceed with brake disc replacement.
For replacement, contact an authorised Betamotor after-sales service centre.

REAR BRAKE

CHECK THE LEVEL OF THE REAR BRAKE FLUID

Check the level of the brake fluid through sight **A**. The level of the fluid should never fall below the mark in the sight.

RESTORING THE LEVEL OF THE REAR BRAKE FLUID

To restore the oil level, top up by means of oil filler cap **1**.

Use the liquid indicated on page 16 in the "Recommended lubricants and liquids" table.

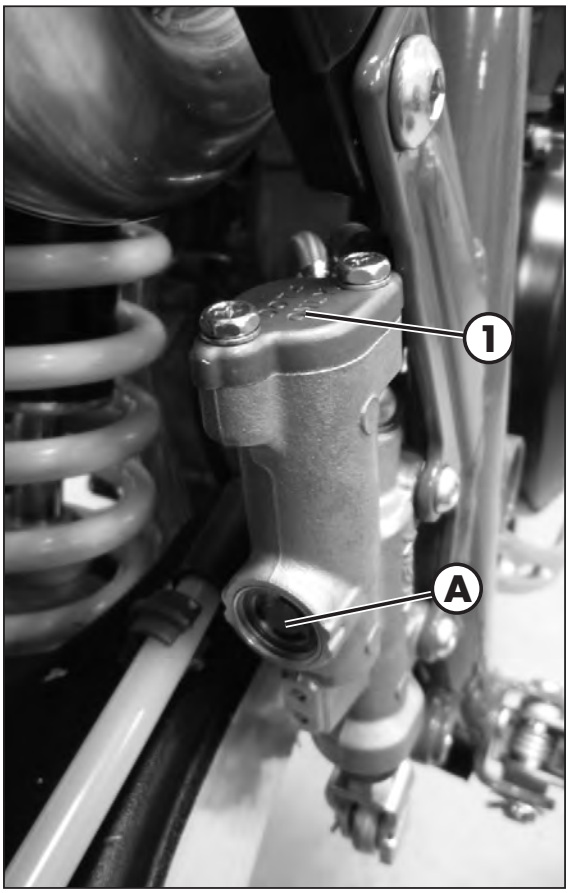

WARNING:
The brake fluid is extremely corrosive. Take care not to spill it on the paintwork.

Wear appropriate protective clothing and protection gloves.

Keep coolant out of reach of children.

WARNING: Avoid any direct contact of the liquid with skin, eyes or clothing. If this happens:

- with the eyes, rinse immediately with plenty of water and seek medical advice.
- with skin, immediately clean contaminated areas with soap and water. Change clothing that is contaminated with liquid.

If liquid is swallowed, contact a doctor immediately.

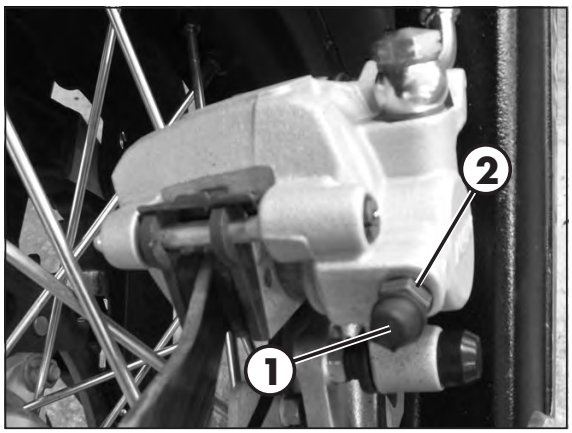

BLEEDING THE REAR BRAKE

To bleed air from the rear brake circuit, proceed as follows:

- Remove the rubber cap **1** from the valve **2**.
- Open the sump cap.
- Place one end of a small transparent tube into the valve **2**, and the other end inside a container.
- Pump with the brake lever 2/3 times and keep the pedal pressed.
- Unscrew the valve and let the oil drain.
- If are still visible in the tube repeat above operation until obtaining a continuous outflow of oil within no air bubbles.
- Close the valve and release the lever.

NOTE:
During this procedure, continuously top up the brake pump thank to replace the oil that is out flowing.

- Remove the tube.
- Replace the rubber cap.
- Close the oil reservoir cap.

Use the liquid indicated on page 16 in the "Recommended lubricants and liquids" table.

WARNING:
The brake fluid is extremely corrosive. Take care not to spill it on the paintwork.

Wear appropriate protective clothing and protection gloves.

Keep coolant out of reach of children.

WARNING: Avoid any direct contact of the liquid with skin, eyes or clothing. If this happens:

- with the eyes, rinse immediately with plenty of water and seek medical advice.
- with skin, immediately clean contaminated areas with soap and water. Change clothing that is contaminated with liquid.

If liquid is swallowed, contact a doctor immediately.

REAR BRAKE LINING CONTROL

In order to verify the wear condition of rear brake is enough to view the caliper from above, where is possible to glimpse the brake lining tails which will have to show a brake of 2 mm in thickness. If the stratum is lesser let's start replacing them.

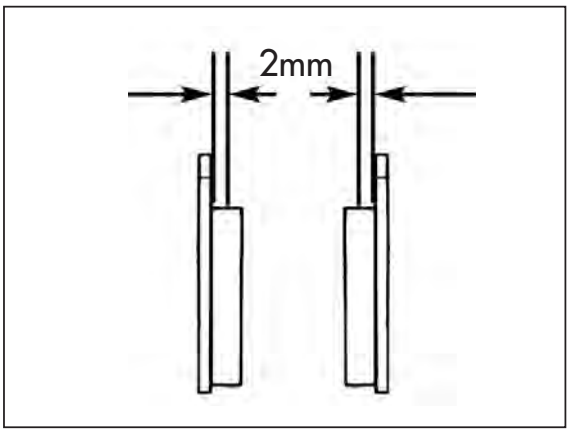

Note:
Perform the check according to the times shown in the table on page 77.

To replace, contact authorised Betamotor customer service.

BRAKE DISC THICKNESS CONTROL

Periodically verify disc condition. In case signs of damage , veins, or deformations are present, proceed with replacement.
Verify disc thickness. The minimum thickness is engraved on the disc.
Once the limit is in proximity or has been reached, proceed with brake disc replacement.
For replacement, contact an authorised Betamotor after-sales service centre.

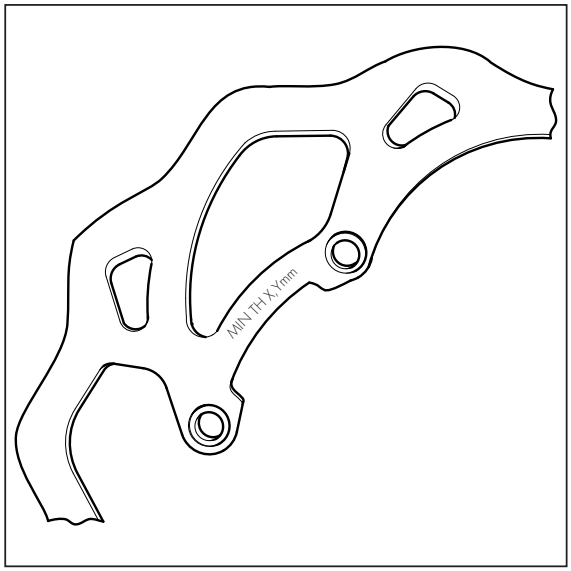

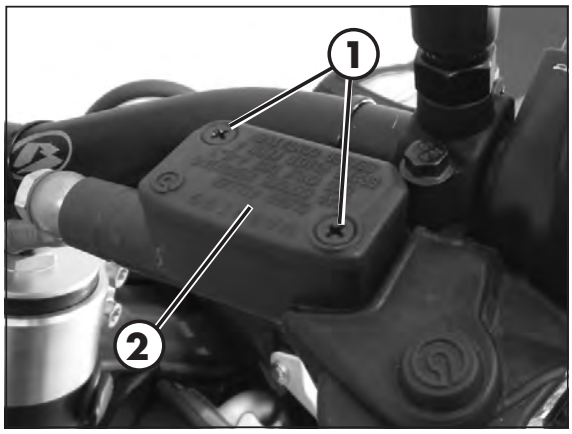

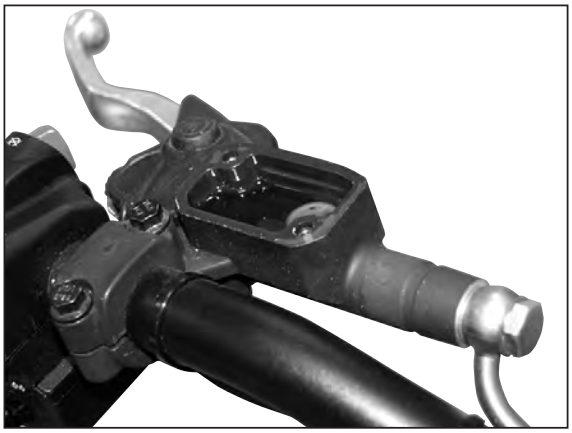

CLUTCH CONTROL

CHECK THE LEVEL

To check the oil level in the clutch pump, first remove cover **2**.
Remove the two screws **1** and take off cover **1** together with the rubber bellows.
With the clutch pump in a horizontal position, the level of the oil should be 5 mm below the upper rim.
In the case where the level is lower than specified top up.

Use the liquid indicated on page 16 in the "Recommended lubricants and liquids" table.

WARNING:
The clutch fluid is extremely corrosive. Take care not to spill it on the paintwork.

Wear appropriate protective clothing and protection gloves.

Keep coolant out of reach of children

WARNING: Avoid any direct contact of the liquid with skin, eyes or clothing. If this happens:

- with the eyes, rinse immediately with plenty of water and seek medical advice.
- with skin, immediately clean contaminated areas with soap and water. Change clothing that is contaminated with liquid.

If liquid is swallowed, contact a doctor immediately.

BLEEDING

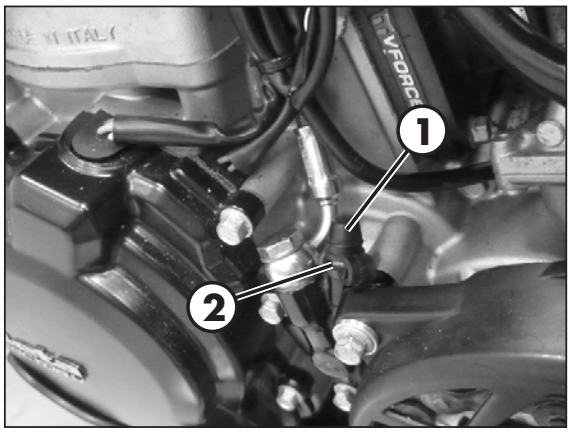

To bleed air from the clutch pump, proceed as follows:
- Remove the rubber cap **1** from the valve **2**.
- Open the sump cap.
- Place one end of a small transparent tube into the valve **2**, and the other end inside a container.
- Pump with the clutch lever 2/3 times and keep the lever pressed.
- Unscrew the valve and let the oil drain.
- If are still visible in the tube repeat above operation until obtaining a continuous outflow of oil within no air bubbles.
- Close the valve and release the lever.

NOTE:
During this procedure, continuously top up the pump tank to replace the liquid that is out flowing.
- Remove the tube.
- Replace the rubber cap.

Use the liquid indicated on page 16 in the "Recommended lubricants and liquids" table.

WARNING:
The clutch fluid is extremely corrosive. Take care not to spill it on the paintwork.

Wear appropriate protective clothing and protection gloves.

Keep coolant out of reach of children.

WARNING: Avoid any direct contact of the liquid with skin, eyes or clothing. If this happens:
- with the eyes, rinse immediately with plenty of water and seek medical advice.
- with skin, immediately clean contaminated areas with soap and water. Change clothing that is contaminated with liquid.

If liquid is swallowed, contact a doctor immediately.

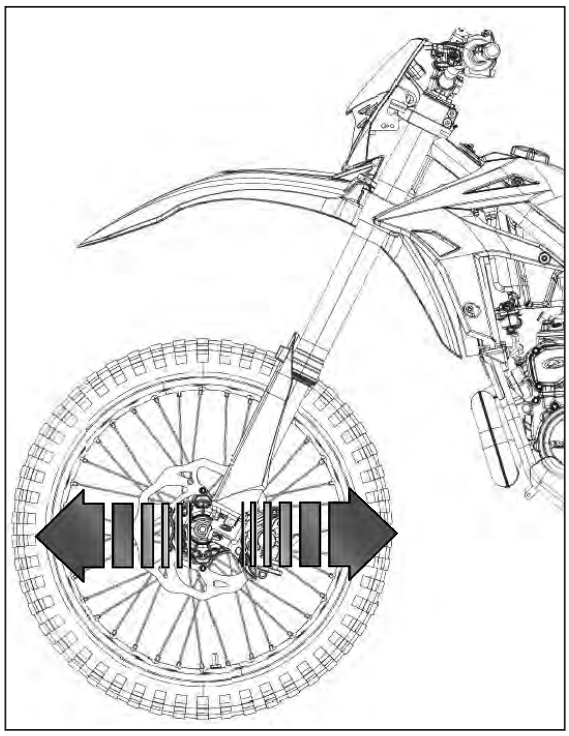

CHECK AND ADJUSTING OF STEERING PLAY

Periodically check the play in the steering sleeve by moving the fork back and forth as shown in the figure. Whenever you feel play, adjust as described below:

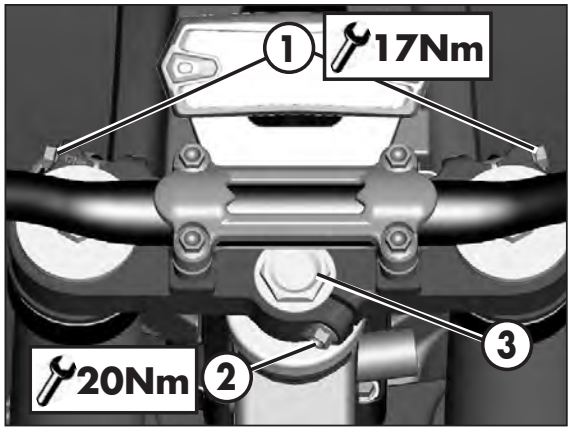

- Loosen the screws **1**
- Loosen the screw **2**
- Reduce the play by turning nut **3**

Tighten the screws to the prescribed torque values.

WARNING:
Tightening of the screws should be carried out by adjusting the torque wrench to the stability torque with repeated tightening until stability torque has been achieved.

FORK

To maintenance refer at an authorized service centre Betamotor.

To check the tightening torques see as shown in the figure.

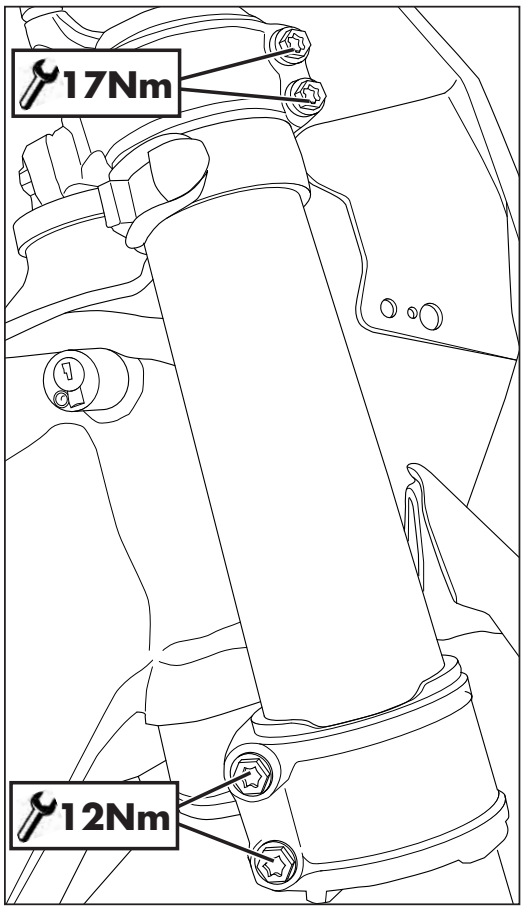

WARNING:
Tightening of the screws should be carried out by adjusting the torque wrench to the stability torque with repeated tightening until stability torque has been achieved.

FRONT WHEEL

TIGHTENING

Following removal of the wheel:

Compress and release the fork 3-4 times.

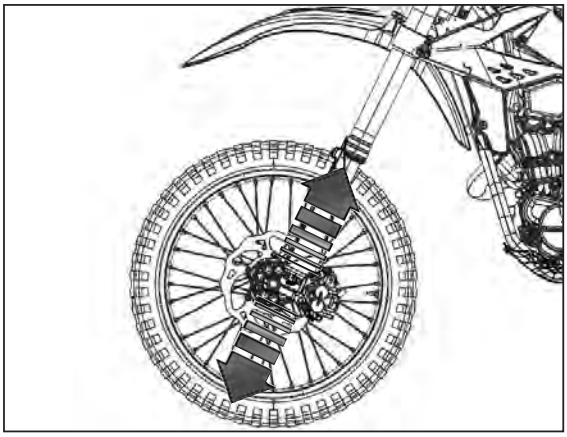

Tighten the wheel bolt and the screws of the foot-leg.

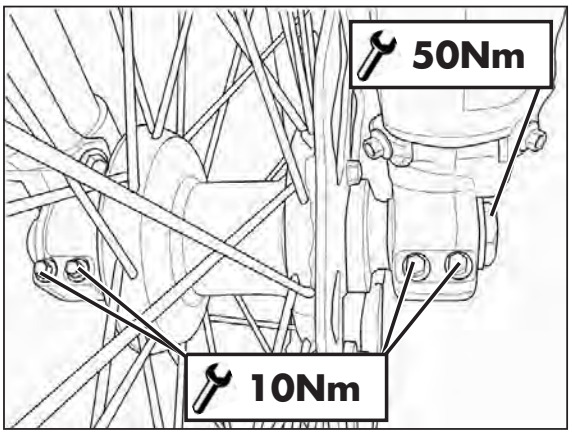

WARNING:
Tightening of the screws should be carried out by adjusting the torque wrench to the stability torque with repeated tightening until stability torque has been achieved.

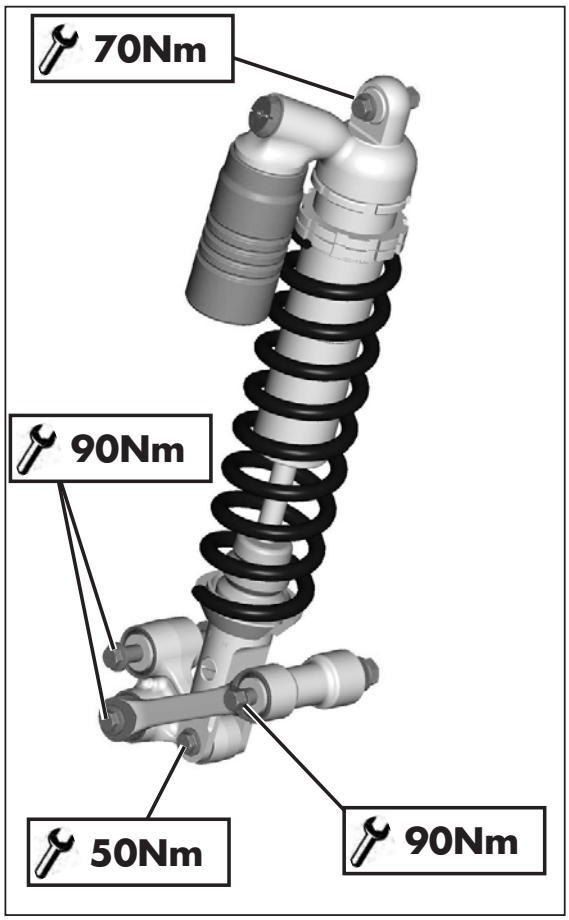

REAR SUSPENSION LEVERAGE

In order to guarantee optimal operation and duration over time of the progressive leverage of the rear suspension, it is recommended to periodically check correct tightness of nuts and bolts.

Verify that suspension nuts and bolts are at the indicated torque.

TYRES

Only fit tyres approved by BETAMOTOR.
Unsuitable tyres can adversely affect the road holding of the vehicle.

- To protect your safety, immediately replace any damaged tyres.
- Slick tyres adversely affect the road holding of the vehicle, especially on wet roads and in off-road riding.
- Insufficient pressure results in abnormal wear and overheating of the tyres.
- The front and rear tyres must have the same tread design.
- Always measure the inflating pressures when the tyres are cold.
- Keep the tyre pressures within the prescribed range.

CHAIN

Checking the drive chain periodically to ensure longer chain life. Always keep it lubricated and clean of deposited dirt.

Take special care in preventing the lubricant from coming into contact with the rear tyre or brake disc, otherwise the tyre grip and the action of the brake would be greatly reduced, making it very difficult to control the vehicle.

CHECK AND ADJUST TIGHTENING CHAIN

Position the drive on a flat base ensuring stability.

If the chain play exceeds 20 mm tension the chain.

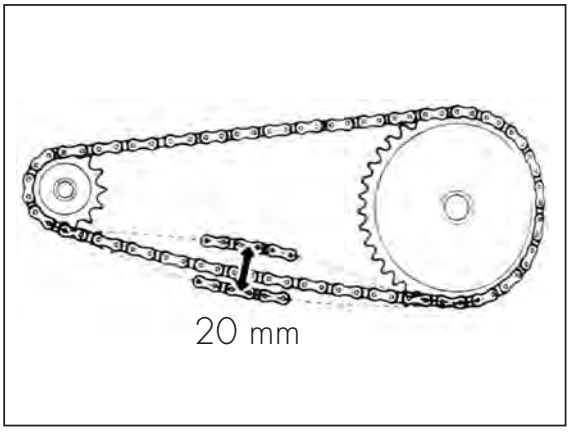

• Loosen the pin **1**.

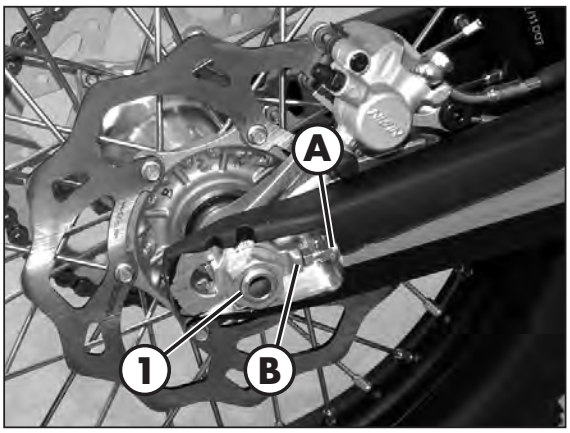

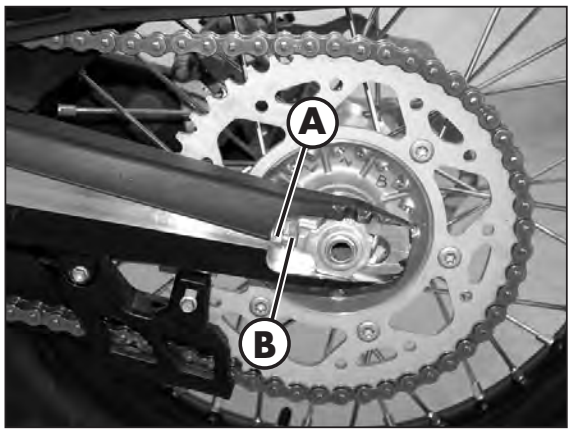

- Loosen counternuts **A** on either side of the fork.
- Turn adjusting screws **B** on either side until the desired chain tension is obtained.
- Tighten counternuts **A** on either side of the fork.

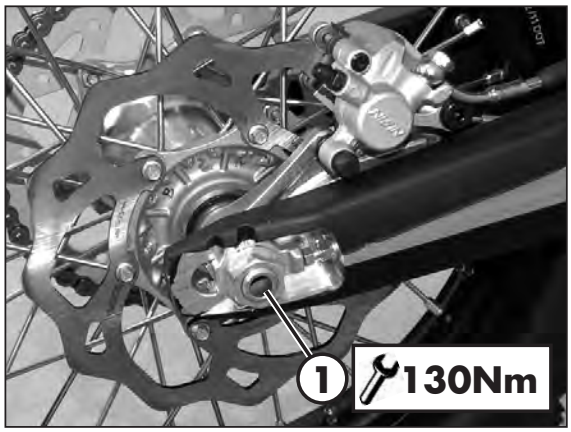

- Tighten the pin **1** to the torque indicated.

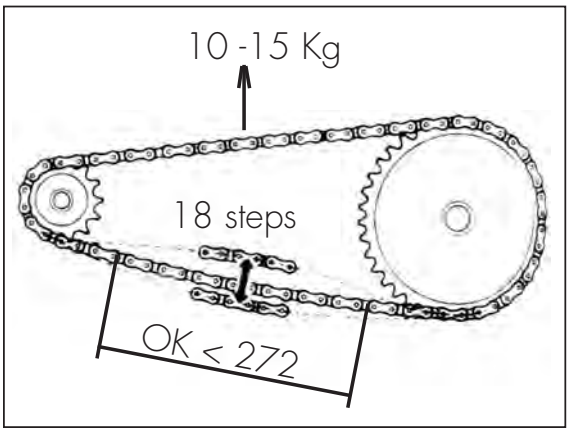

CHECK FOR CHAIN WEAR

Shift into neutral, pull up the upper stretch of the chain with a force of 10 - 15 kg (see figure). Measure the length of 18 links on the lower stretch of the chain. If the length is ≥ 272 mm, replace the chain. Chains do not always wear evenly. For this reason it is important that the measurement is taken at different points along the chain.

When fitting a new chain, be sure to replace the chainring and sprocket as well. New chains wear more quickly if fitted on old and worn sprockets. After replacing the chain, adjust its tension as described on page 69.

HEADLIGHT

Keep the headlight glass clean at all times (see page 75).

Periodically check the correct angle of the light beam.

REPLACING THE HEADLIGHT BULBS

Remove the fixing screws and move forward the lamp holder front cowl.

Carefully remove the headlight bulb **1** together with lamp holder. To replace the high beam/low beam, lift the rubber cover **2**, release connector, push on the spring **3** and remove the lamp holder and replace the light bulb with a new one. Be careful not to touch the bulb so as not to compromise its efficiency.

To refit, follow the procedure above but in reverse order.

Fasten the lamp holder front cowl to the supporting pins and fix it with the two elastics.

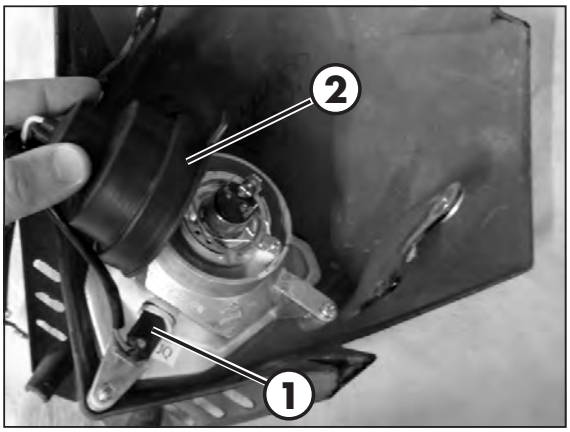

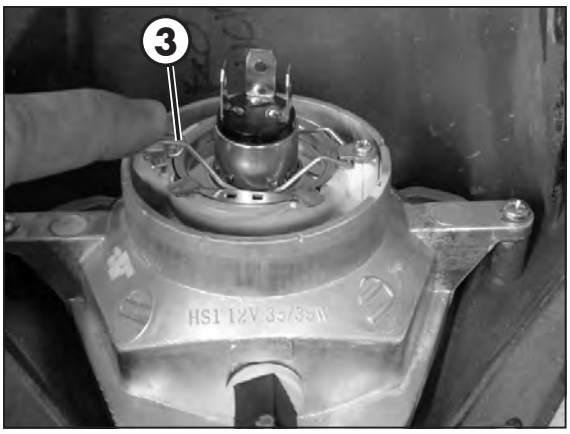

TAIL LIGHT

Keep the tail light glass clean at all times (see page 75).

The LED tail light is sealed. In the case of burnout of one or more LEDs it is necessary to replace the entire group.

To replace, contact authorised Betamotor customer service.

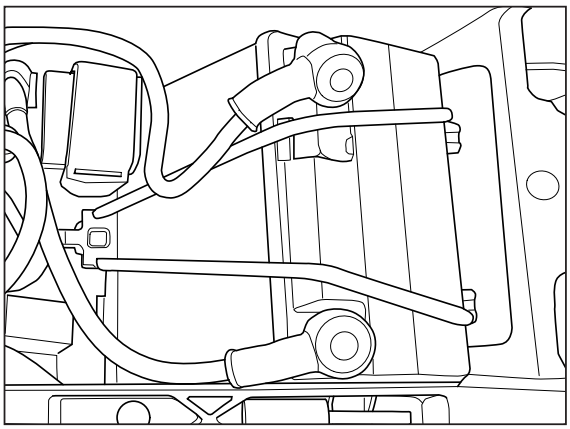

BATTERY

Battery is located under the saddle and requires no maintenance.

Keep the battery terminals clean. If necessary, protect them with a thin film of acid-free grease.

WARNING:
The battery contains hazardous substances:
- Keep the batterie out of the reach of children.

- Keep sparks and open flames away from the battery.

- Charge the battery only in well-ventilated areas, keeping it away from flammable materials. Use only chargers suitable for charging lithium-ion batteries.

- Do not attempt to charge fully exhausted batteries with a voltage lower than the minimum 9V. In this case, dispose of the battery according to applicable regulations.

- Do not remove the protections.

- When installing the battery, be sure to observe the polarity of the terminals.

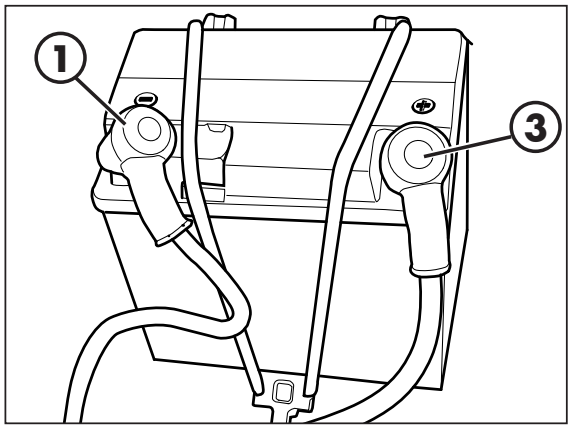

BATTERY REMOVAL

Shut off all electrical users and stop the engine.
Remove the saddle (page 82).

FIRST remove the cap **1** of the negative pole and disconnect the negative lug **2** (black) from the negative pole.

THEN remove the cap of the positive pole **3** and disconnect the positive lug **4** (red) from the positive pole (+).

Release the rubber band **5**.

Remove the battery.

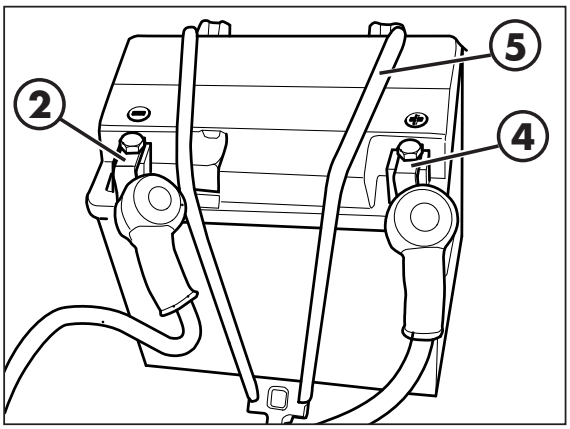

BATTERY ASSEMBLY

When fitting the battery, insert it with the terminals as shown in picture.

Reattach the rubber band **5**.

FIRST Connect the positive lug **4** (red) to the positive pole (+) of the battery by pushing the protective cap **3** in its position.

THEN secure the negative lug **2** (black) to the negative pole (-) of the battery by bringing the relative protective cap **1** in position.

Refit the saddle (page 82).

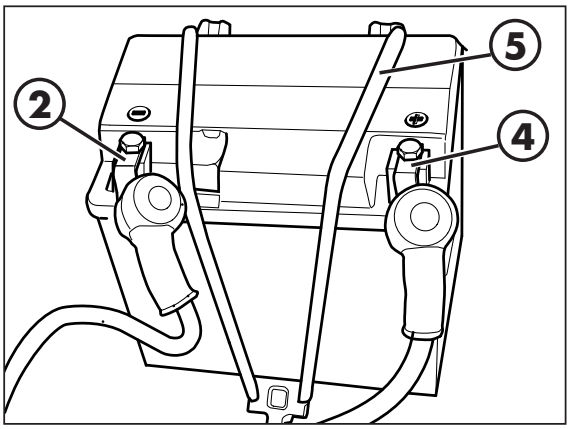

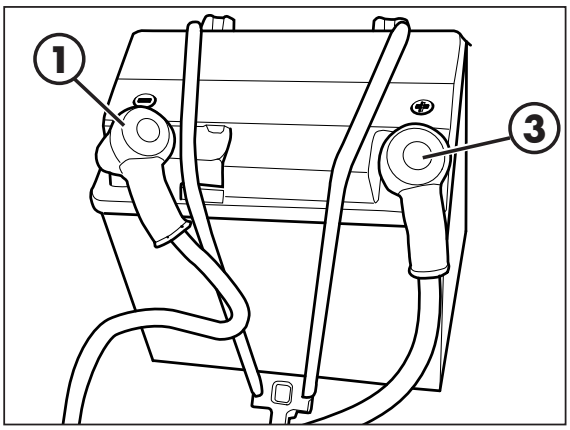

INACTIVITY

If the vehicle is not going to be used for a long time:
- remove the battery (page 72).
- charge with an adequate charger (page 74).
- store the battery in a dry place. The ideal temperature for storing the lithium-ion battery is 20°C.



CHARGING THE BATTERY

Check the battery charge using a multimeter or by pressing the "TEST" button on the battery

- Voltage < 9V or "LOW":
  - Do NOT charge the battery
  - Replace the battery with a new equivalent one

- Voltage <12.4V or "MED":
  - Charge the battery

Guidelines to charge the battery:

Use ONLY chargers suitable for charging lithium-ion batteries.
Maximum charging voltage: 14.4V
Maximum charging current: 3.0A
Maximum charge time:12h
Recharge the battery regularly with a specific battery charger when the vehicle is not used for more than 6 months
Ideal temperature for charging lithium ion batteries: 20 °C.

FUSES

To access the fuse, remove the saddle (page 82).

In the case of blown fuse, the vehicle will not start/stop:

Three spare fuses comes with the kit accompanying the vehicle.

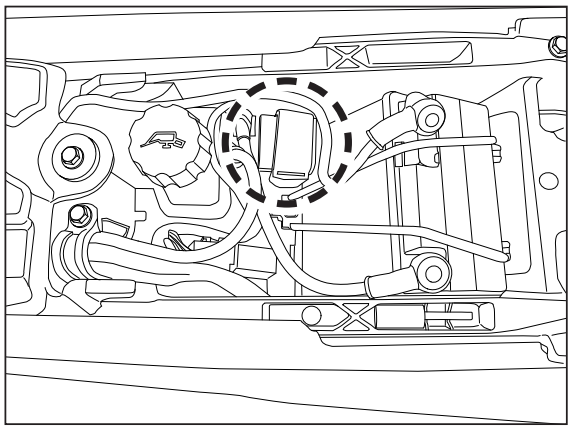

A blown fuse should only be replaced with another of the same type.
Should the new fuse also burn out when fitted, immediately contact a specialized BETAMOTOR dealer.

CLEANING THE VEHICLE

GENERAL PRECAUTIONS

WARNING: Do not clean your vehicle with a high-pressure device with a strong jet of water. Excessive pressure can reach electrical components, connectors, flexible cables, bearings, etc and can damage or destroy them.

WARNING: Wash motorbikes frequently with cold water that are used near the sea (salty air) and on roads subject to salt spreading in winter. Cover with a film of oil or silicone spray unpainted parts and the most exposed parts such as wheels, forks and swingarm. Do not treat rubber parts and brakes.

When cleaning, avoid direct exposure to sunlight.

Close off the exhaust system to prevent water from entering.

Avoid directing the jet of water onto the air filter box cover and the throttle body.

WASHING MODE

Use water jet to soften the dirt and mud accumulated on the paintwork, then remove them with a soft bodywork sponge soaked in water and shampoo. Subsequently rinse well with water, and dry with air and cloth or suede leather.

Detergents pollute water. Always wash the vehicle in areas equipped for collection and purification of the washing liquids.

AFTER WASHING

Proceed to the emptying of the filter box using the appropriate ventilation and drying.

After cleaning, ride a short distance until the engine reaches operating temperature.

WARNING: braking effect is reduced with wet brakes. Operate the brakes cautiously to allow them to dry.

Push back the handlebar control covers, so that water can evaporate.

When the bike is completely dry and cooled down, lubricate all moving parts.

Treat all plastic and painted components with non-aggressive detergents or products that are specific for the care of the motorcycle.

4 PROLONGED INACTIVITY

A few simple operations should be performed to keep the vehicle in good condition whenever it is to remain inactive for a long period (e.g. during the winter):

- Thoroughly clean the vehicle.
- Reduce the tyre pressures by approximately 30 percent, and if possible raise the tyres off the ground.
- Cover the unpainted parts, excepting the brakes and the rubber parts, with a film of oil or spray silicone.
- Remove the battery (page 72), follow the instructions for inactivity (page 73) and recharging (page 74).
- Protect the vehicle with a dust cover.

AFTER PROLONGED INACTIVITY

- Reinstall the battery.
- Restore the tyre inflating pressures.
- Check the tightening of all the screws having an important mechanical function.

SCHEDULED MAINTENANCE VEHICLE

		End of running-in - **3** hours	Coupon **1** - **30** hours	Coupon **2** - **60** hours	Coupon **3** - **90** hours	Coupon **4** - **120** hours	Coupon **5** - **150** hours	Coupon **6** - **180** hours
Engine	Gear and clutch oil	**S**	**S**	**S**	**S**	**S**	**S**	**S**
	Spark plug	**C**		**S**		**S**		**S**
	Head screws	**T**						
	Engine clamping screws *	**C**	**C**	**C**	**C**	**C**	**C**	**C**
	Kick start and gearchange lever screws	**C**	**C**	**C**	**C**	**C**	**C**	**C**
	Spark plug cap	**P**	**P**	**P**	**P**	**P**	**P**	**P**
	Coated clutch disks		**C**	**C**	**S**	**C**	**C**	**S**
	Clutch springs length		**C**	**C**	**S**	**C**	**C**	**S**
	Clutch/bell hub		**C**	**C**	**C**	**C**	**C**	**C**
	Gearbox bearing (drive shaft side)				**S**			**S**
	Cylinder			**C**		**C**		**C**
	Piston and segments			**S**		**S**		**S**
	Connecting rod				**S**			**S**
	Drive shaft bearings				**S**			**S**
	Surface appearance of the gearbox				**C**			**C**
	Water pump oil seal				**S**			**S**
	Exhaust valve			**C/P**			**C/P**	
	Reed valve			**C**		**C**		**C**
Carburetor	Tightness	**C**	**C**	**C**	**C**	**C**	**C**	**C**
	Idling setting	**C**	**C**	**C**	**C**	**C**	**C**	**C**
	Fuel pipe	**C**	**C**	**C**	**C**	**C**	**C**	**C**
	Breather pipe	**C**	**C**	**C**	**C**	**C**	**C**	**C**
Assembling groups	Coolant system tightness and coolant level	**C**	**C**	**C**	**C**	**C**	**C**	**C**
	Exhaust manifold tightness	**C**	**C**	**C**	**C**	**C**	**C**	**C**
	Drives sliding and regulation	**C**	**C**	**C**	**C**	**C**	**C**	**C**
	Liquid level clutch pump	**C**	**C**	**C**	**C**	**C**	**C**	**C**
	Airbox and air filter	**P**	**P**	**P**	**P**	**P**	**P**	**P**
	Final transmission	**C**	**C**	**C**	**C**	**C**	**C**	**C**

Key

C **Check** (Clean, adjust, lubricate, replace as necessary)
S **Replace/renew**
R **Adjust**
P **Clean**
T **Tighten**

		End of running-in - **3** hours	Coupon **1** - **30** hours	Coupon **2** - **60** hours	Coupon **3** - **90** hours	Coupon **4** - **120** hours	Coupon **5** - **150** hours	Coupon **6** - **180** hours
Brakes	Liquid level, pads thickness	**C**	**C**	**C**	**C**	**C**	**C**	**C**
	Disc thickness	**C**	**C**	**C**	**C**	**C**	**C**	**C**
	Pipe tightness	**C**	**C**	**C**	**C**	**C**	**C**	**C**
	Idle travel levers and drives sliding	**C**	**C**	**C**	**C**	**C**	**C**	**C**
Cycling	Shock absorber and telescopic fork	**C**	**C**	**C**	**C**	**C**	**C**	**C**
	Rear suspension linkage	**C**	**C**	**C**	**C**	**C**	**C**	**C**
	Fuel lines	**C**	**C**	**C**	**C**	**C**	**C**	**C**
	Fork cover	**C**	**C**	**C**	**C**	**C**	**C**	**C**
	Bearings of stearing	**C**	**C**	**C**	**C**	**C**	**C**	**C**
	Bolts	**T**	**T**	**T**	**T**	**T**	**T**	**T**
Wheels	Wheel spokes and rim coaxiality	**C**	**C**	**C**	**C**	**C**	**C**	**C**
	Tyres (wear and pressure)	**C**	**C**	**C**	**C**	**C**	**C**	**C**
	Bearings clearance	**C**	**C**	**C**	**C**	**C**	**C**	**C**

Key

C **Check** (Clean, adjust, lubricate, replace as necessary)
S **Replace/renew**
R **Adjust**
P **Clean**
T **Tighten**

(*) Attachment	Screw	Thread locker	Torque [Nm]
Engine to chassis	Special screw M10		45
Head brackets fastening front fixing	M8x20	M#	35
Head brackets fastening rear fixing	M8x16	M	35
Brackets to attach the head to the engine	M8x65		35

* Medium strength threadlock

WARNING:
For any service requirements, please contact Betamotor's Authorized Service Network.

TIGHTENING TORQUE OVERVIEW

Here below is an overview of the tightening torque of all pieces subject to adjustment or maintenance:

Forecarriage		
	Tightening torque [Nm]	Threadlock
Wheel pin	50	
Fork foots - wheel pin	10*	
Brake caliper - Fork	35	M
Cavallotto parastelo sinistro	1,5	
Steering head base - fork legs	12*	
Steering head - fork legs	17*	
Stem pin on steering head	20	
Lower handlebar u-bolt - steering head	40	M
Upper handlebar u-bolt - lower handlebar u-bolt	25	

Rear axle		
	Tightening torque [Nm]	Threadlock
Wheel pin	130	
Rear shock absorber - frame	70	
Rear shock absorber - rocker arm	50	
Connecting rod - frame	90	
Connecting rod - rocker arm	90	
Rocker arm - swinging arm	90	

Engine		
	Tightening torque [Nm]	Threadlock
Gearbox oil drain plug	15	

Engine - Frame		
	Tightening torque [Nm]	Note
Pins motor - frame	45	
Brackets to attach the head - frame (front fixing)	35	M
Brackets to attach the head - frame (rear fixing)	35	M
Brackets to attach the head - motor	35	

M Medium strength threadlock

* WARNING:
Tightening of the screws should be carried out by adjusting the torque wrench to the stability torque with repeated tightening until stability torque has been achieved.

CHAPTER 5 REMOVING AND INSTALLING SUPERSTRUCTURES

CONTENTS

Removing and installing of the saddle..... 82
Removing and installing air filter side panel..... 83
Removing and installing of the complete tank..... 83

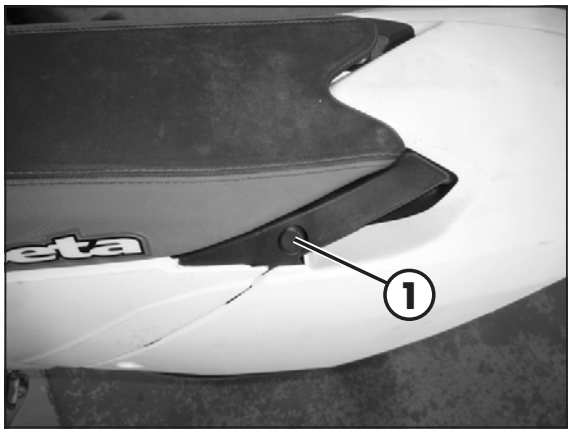

REMOVING AND INSTALLING OF THE SADDLE

Press button **1**.

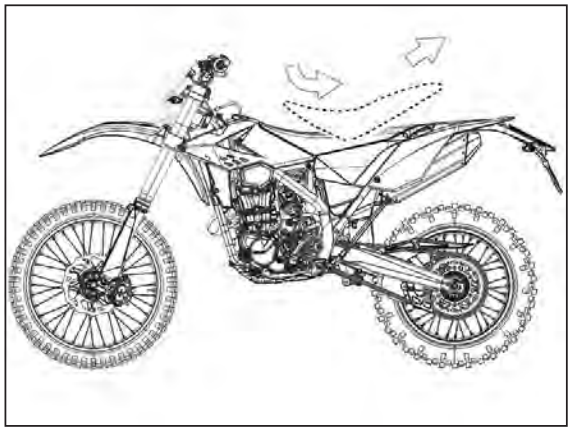

Remove the saddle towards the rear of the motorcycle.

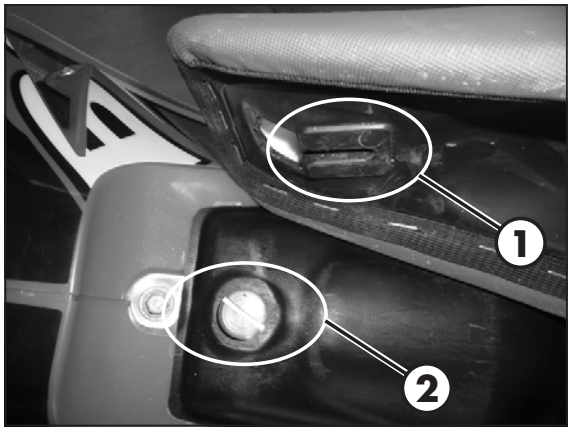

To re-assemble:
Insert the cavity **1** of the saddle in slot **2**.

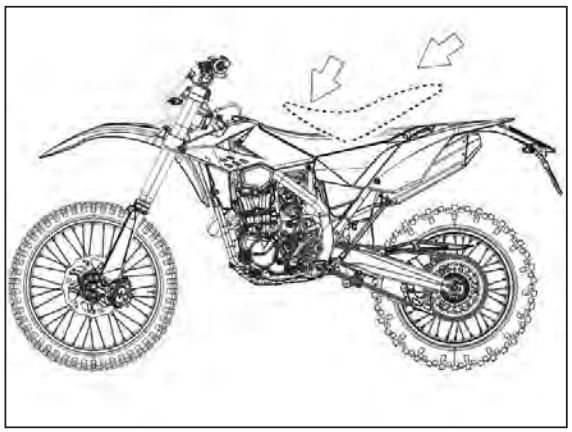

Press the saddle down in the middle and at the same time, push it forwards until the bayonet joint engages in its seat.

WARNING
Make sure the bayonet joint **3** is firmly inserted into the button lock.

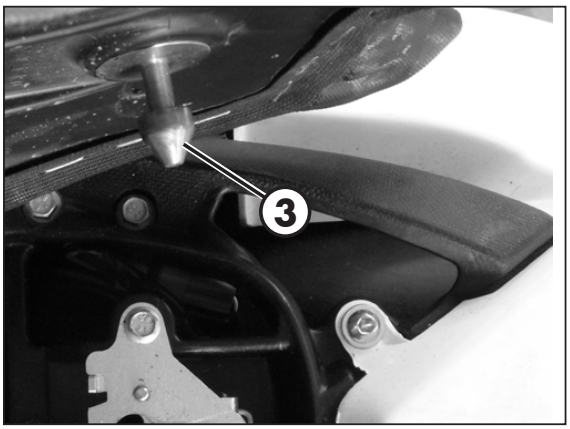

REMOVING AND INSTALLING AIR FILTER SIDE PANEL

Remove the saddle (page 82).

Grab the side panel in the front side and pull out.

To refit insert the tabs **1** into their slots.

Slide the side panel toward the vehicle.

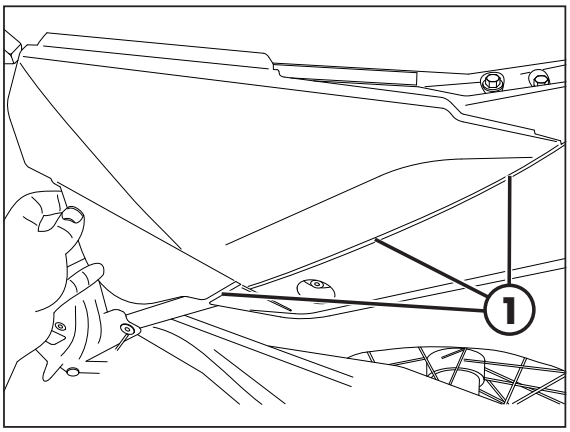

REMOVING AND INSTALLING OF THE COMPLETE TANK

Disconnect the fuel tank vent pipe.

Turn the fuel cock to OFF position (page 18) and disconnect the fuel hose from the fuel cock.



WARNING:
Follow action on a cold engine.

WARNING:
Fire hazard. Fuel is highly flammable.

Always stop the engine when refuelling and keep open flames and lighted cigarettes away.

Immediately clean up any spilled fuel.

Remove the air filter side panel (page 83).

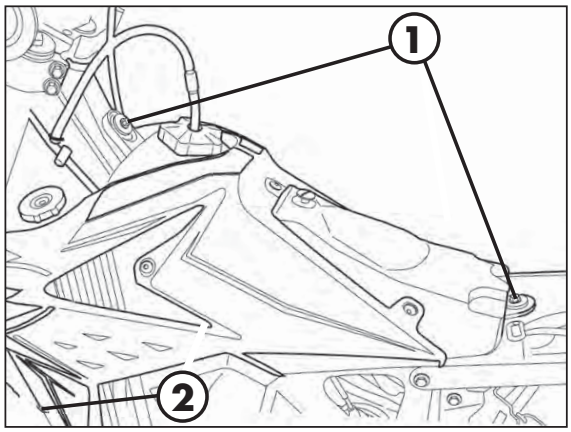

Remove the two screws **1** fastening the tank to the frame and the screw **2** (one per side) securing the fairing to the radiator.

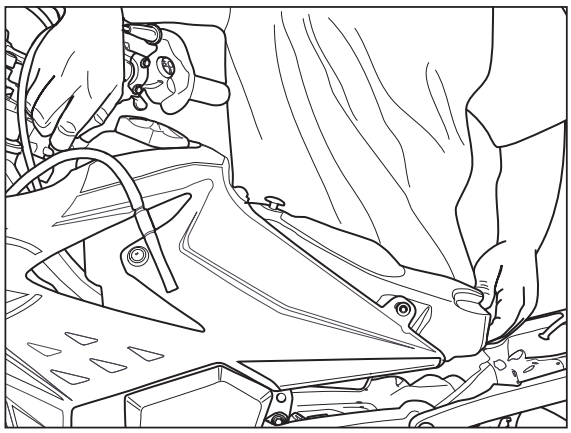

Lift the tank complete with side panels.

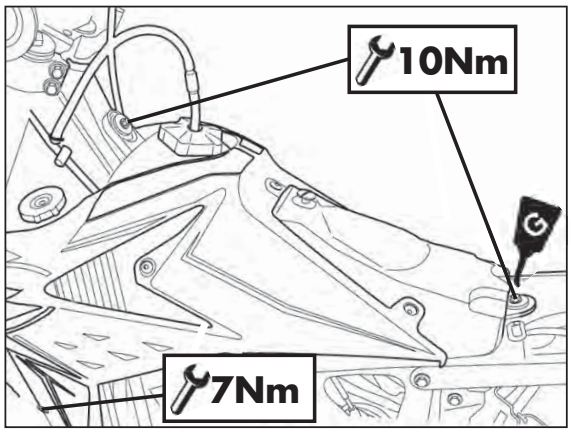

Replace the previously removed components following the disassembly procedures inversely.
Tighten the tank screws to the torques given.

CHAPTER 6 TROUBLESHOOTING

CONTENTS

Troubleshooting 86
Alphabetical index 87

PROBLEM	CAUSE	REMEDY
Engine does not start	-Fuel system clogged (fuel lines, fuel tank, fuel cock)	Contact authorised BETAMOTOR customer service
	- Air filter dirty	Check the air filter
	- No current supplied to spark plug	Clean or replace the spark plug. If the problem persists, contact authorised BETAMOTOR customer service
	- Engine flooded	Operate the electrical starter push button 2 times for 5 seconds. If the vehicle does not start, remove and dry the spark plug
	- Excessive distance between the electrodes	Check the distance between the electrodes
	- Ignition connector or coil slackened or oxidized	Clean with a spray product for electric contacts and tighten
	- Presence of water in the carburettor	Empty the carburettor tank
The engine starts but the telltale "MIL" lights on	- Engine management system fault	Empty the fuel tank and refuel with mixture at 1.6%. Contact authorised BETAMOTOR customer service
"High Voltage" appe-ars on the instrument	- Overcharging	Disconnect the battery (page 72) Contact authorised BETAMOTOR customer service
Engine misfires	- Spark gap wrongly adjusted	Restore the spark gap
	- Spark plug dirty	Clean or replace the spark plug
The engine does not hold idling	- Idling air jet clogged	Contact authorised BETAMOTOR customer service
	- Adjustment screws poorly adjusted	Adjust
	- Faulty spark plug	Replace the spark plug
	- Faulty ignition system	Check the coil and the spark plug cap
Engine overheats and loses power	- Silencer partly clogged	Contact authorised BETAMOTOR customer service
	- Laminar pack damaged	Contact authorised BETAMOTOR customer service
	- Fault in the ignition system	Contact authorised BETAMOTOR customer service
Excessive smoke	- Possible mixer system fault	Contact authorised BETAMOTOR customer service
Front braking poor	- Brake pads worn	Contact authorised BETAMOTOR customer service
	- Air or humidity in the hydraulic circuit	Follow the procedure described on page 59
Rear braking poor	- Brake pads worn	Contact authorised BETAMOTOR customer service
	- Air or humidity in the hydraulic circuit	Follow the procedure described on page 62

ALPHABETICAL INDEX

Adjusting fork 44
Adjusting the idle speed 39
Adjustment of gas clearance 39
Air filter 54

Battery 72
Brakes 38

Carburettor 56
Chain 69
Check and adjusting of steering play 66
Checks before and after use 33
Cleaning the vehicle 75
Clutch 38
Clutch control 64

Digital rpm indicator operating instructions 23

Electrical system 14
Engine oil 50
Engine shut-down 35
Exhaust valve control adjustment 43

Familiarizing with the vehicle 10
Fork 67
Front brake 58
Front wheel 67
Fuses 74

Handlebar adjustment 43
Headlight 71

Key to symbols 38
Key to symbols 50

Liquid coolant 51

Main parts 18

INDEX

Oil mixer refuelling 34
Operating instructions 5

Prolonged inactivity 76

Rear brake 61
Rear suspension leverage 68
Recommended lubricants and liquid 16
Refuelling 34
Removing and installing air filter side panel 83
Removing and installing of the complete tank 83
Removing and installing of the saddle 82
Replacing the headlight bulbs 71
Riding safety 6
Running in 33

Scheduled maintenance vehicle 77
Shock absorber 45
Spark plug 55
Specifications 11
Starting the engine 35
Symbols 5

Tail light 71
Tightening torque overview 79
Tools kit 8
Troubleshooting 86
Tyres 68

Vehicle identification data 8

Integrazione al manuale uso e manutenzione / Supplementary sheet of owner manual / Initiation au manuel d'entretien / Ergänzung zum Handbuch / Aanvulling handleiding gebruik en onderhoud / Integración al manual de uso y mantenimiento

DATI TECNICI	SPECIFICATIONS	CARACTÉRISTIQUES TECHNIQUES	TECHNISCHE ANGABEN	TECHNISCHE GEGEVENS	DATOS TÉCNICOS
SOSPENSIONE ANTERIORE	**FRONT SUSPENSION**	**SUSPENSION AVANT**	**VORDERRADAUFHÄNGUNG**	**VOORSTE OPHANGING**	**SUSPENSIÓN DELANTERA**
Forcella idraulica a steli rovesciati (steli Ø48 mm) a cartuccia chiusa	Hydraulic upside-down fork (Ø48 mm shafts) pressurized cartridge	Fourche hydraulique à tiges renversées (tiges Ø48 mm) fourche à cartourche fermée	Hydraulische Gabel mit umgekehrten Schäften (Schaftdurchmesser Ø48 mm) Closed cartridge	Hydraulische vork met omgekeerde stelen (stelen diam. 48 mm) en gesloten patroon	Horquilla hidráulica con barras invertidas (barras Ø48 mm)
molla: K 4,4 tipo olio: Fuchs SAE 5 quantità olio: 340ml (per gamba)	spring: K 4,4 oil type: Fuchs SAE 5 oil quantity: 340ml (each leg)	ressort: K 4,4 type d'huile: Fuchs SAE 5 Quantité huile: 340ml (chaque tige)	Feder: K 4,4 Öltyp: Fuchs SAE 5 Ölmenge: 340ml (jedes Gabelrohr)	veer: K 4,4 type olie: Fuchs SAE 5 hoeveelheid olie: 340ml (per poot)	muelle: K 4,4 tipo de aceite: Fuchs SAE 5 cantidad de aceite: 340ml (para barra)
REGOLAZIONI	**ADJUSTMENTS**	**RÉGLAGES**	**EINSTELLUNGEN**	**AFSTELLINGEN**	**REGULACIONES**
SOSPENSIONE ANTERIORE	**FRONT SUSPENSION**	**SUSPENSION AVANT**	**VORDERRADAUFHÄNGUNG**	**VOORSTE OPHANGING**	**SUSPENSIÓN DELANTERA**
1) Registro freno compressione: 14 click da tutto chiuso 2) Registro freno estensione: 12click da tutto chiuso	1) Adjusting the compression damper: 14 clicks from the completely closed position 2) Adjusting the rebound damper: 12 clicks from the completely closed position	1) Réglage du frein en compression: 14 déclenchements de la position, tout fermé 2) Réglage du frein en extension: 12 déclenchements de la position, tout fermé	1) Einstellung der Druckstufe: 14 Klicks von der Position vollständig geschlossen. 2) Einstellung der Zugstufe: 12 Klicks von der Position vollständig geschlossen.	1) Afstelling rem compressie: 14 kliks vanaf volledig dicht 2) Afstelling rem extensie: 12 kliks vanaf volledig dicht	1) Regulación del freno en compresiòn: 14 disparos desde la posición totalmente cerrada. 2) regulación del freno en extensión: 12 disparos desde la posición totalmente cerrada

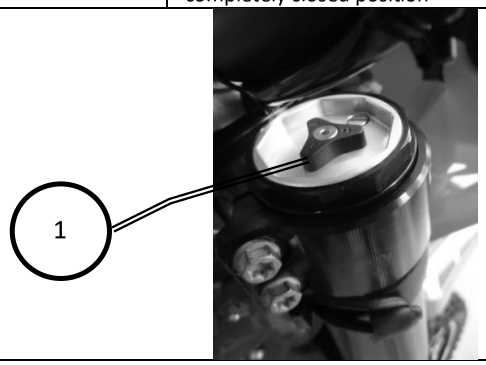

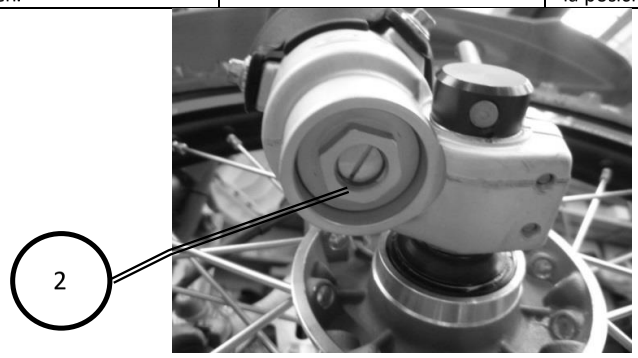

Betamotor S.p.A. Via Pian dell'Isola, 72 – 50067 Rignano Sull'Arno (FI) Italia
Telefono +39 055 8348741 – www.betamotor.com

©Tutti i diritti riservati.

Integrazione al manuale uso e manutenzione / Supplementary sheet of owner manual / Initiation au manuel d'entretien / Ergänzung zum Handbuch / Aanvulling handleiding gebruik en onderhoud / Integración al manual de uso y mantenimiento

MANUTENZIONE FORCELLA	FORK MAINTENANCE	ENTRETIEN FOURCHE	GABELWARTUNG	ONDERHOUD VORK	MANTENIMIENTO HORQUILLA
Rivolgersi presso un'offi cina autorizzata BETAMOTOR	Contact authorised Betamotor customer service	Contactez un concessionnaire agrée BETAMOTOR	Wenden Sie sich an eine autorisierte Werkstatt von BETAMOTOR	Wend u tot een geautoriseerd atelier BETAMOTOR	Diríjase a un taller autorizado BETAMOTOR
COPPIE SERRAGGIO RUOTA ANTERIORE E PIASTRE FORCELLA	**FRONT WHEEL AND TRIPLE CLAMPS TIGTHENING TORQUE**	**DOUBLE VIS DE SERRAGE – ROUE AVANT ET TE DE FOURCHE**	**ANZUGSDREHMOMENTE VORDERRAD UND GABEL**	**AANHAALMOMENT VOORWIEL EN PLATEN VORK**	**DOBLE TORNILLO DE AJUSTE – HORQUILLA DELANTERA Y PLETINAS HORQUILLA**
⚠ ATTENZIONE: Il serraggio delle viti deve essere eseguito regolando la chiave dinamometrica alla coppia stabilita ed eseguendo il serraggio in maniera reiterata, fino al raggiungimento della coppia stabilita.	⚠ WARNING: Tightening of the screws should be carried out by adjusting the torque wrench to the stability torque with repeated tightening until stability torque has been achieved.	⚠ ATTENTION : Le serrage des vis doit être effectué en réglant la clé dynamométrique selon le couple défini et en effectuant le serrage de manière réitérée, jusqu'à atteindre le couple défini.	⚠ ACHTUNG: Die Schrauben müssen mit einem Drehmomentschlüssel unter Beachtung des angegebenen Werts angezogen werden. Das Anziehen muss so lange wiederholt werden, bis Drehmomentstabilität erreicht ist.	⚠ LET OP: Het schroeven moeten vastgedraaid worden door de momentsleutel te regelen op het voorgeschreven aanhaalmoment en in meer momenten vast te draaien, tot het aanhaalmoment bereikt is.	⚠ ATENCIÓN: El ajuste de los tornillos se debe efectuar regulando la llave dinamométrica según el par establecido y efectuando el ajuste repetidamente, hasta alcanzar el par establecido.



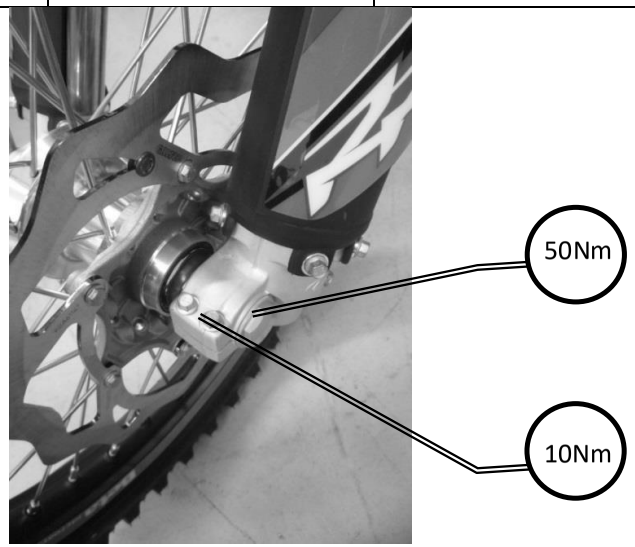

©Tutti i diritti riservati.

RR 2T ENDURO 2019
250/300cc
RR 2T ENDURO 2019
250/300cc RACING

CATALOG OF SPARE PARTS



The images and content herein are the exclusive property of Betamotor SpA, which reserves all rights thereto. Any reproduction, modification, editing, dissemination, communication, exploitation in any form and way, original or derived, is strictly forbidden if not expressly approved in writing by Betamotor SpA. Any violation will be actively pursued in all relevant civil and criminal forums by Betamotor SpA.

TAV.01A Carter completo - Cranckcase, assy - Carter complet - Kurbelwellengehäuse, KPL. - Carter completo

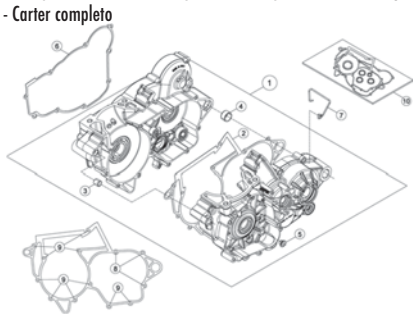

Pag. 6

TAV.01B Coperchio frizione - Clutch cover - Couvercle d'embrague - Kupplungsdeckel - Tapa embrague

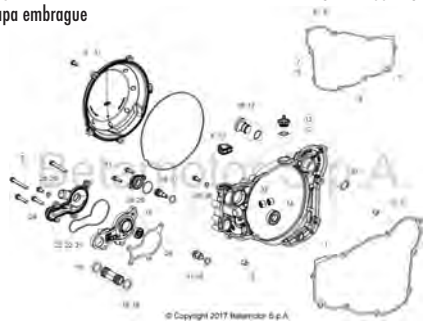

Pag. 8

TAV.01C Collettore aspirazione - Intake manifold - Collecteur aspiration - Ansaugstutzen - Colector aspiración



Pag. 9

TAV.02 Albero motore - Crankshaft - Vilebrequin - Kurbelwelle - Cigüeñal



Pag. 10

TAV.03 Frizione - Clutch - Embrayage - Kupplung - Embrague

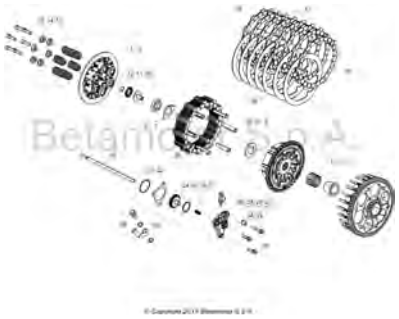

Pag. 12

TAV.04A Albero primario - Main shaft - Arbre primaire - Hauptwelle - Arbol primario

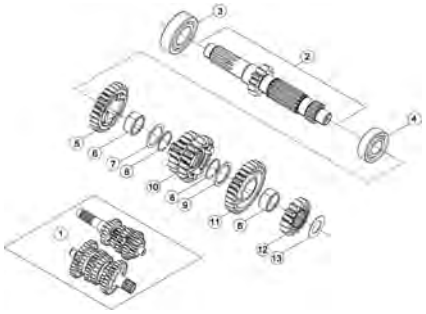

Pag. 14

TAV.04B Albero secondario - Counter shaft - Arbre secondaire - Nebengetriebewelle - Eje secundario



Pag. 15

TAV.05 Comando cambio - Gear shift control - Commande changement de vitesse - Chaltung - Mando cambio



Pag. 16

TAV.07 Avviamento elettrico - Electric starter - Démarrage électrique - Elektrischer start - Arranque eléctrico

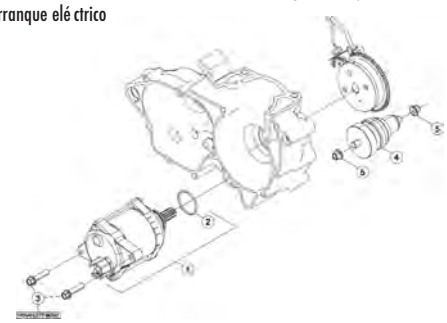

Pag. 17

TAV.09 Sistema di raffreddamento - Cooling system - Dispositifs de refroidissement - Kühlungssystem - Sistema de enfriamiento



Pag. 18

TAV.10 Gruppo accensione elettronica - Electronic ignition assy. - Groupe allumage electronique - Elektronische Zündukgruppe - Grupo encedido electrónico

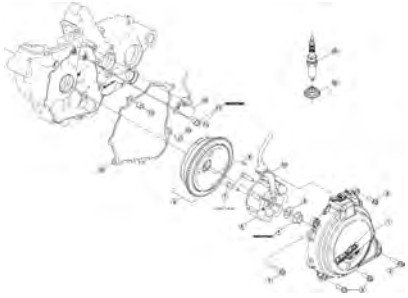

Pag. 20

TAV.11 Cilindro completo - Cylinder , assy - Cylindre complet - Zylinder, KPL. - Cilindro completo

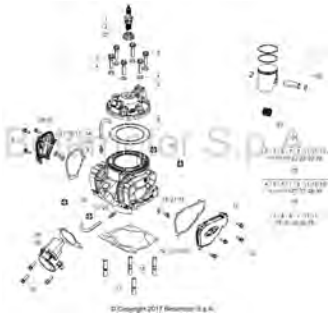

Pag. 22

TAV.12 Carburatore - Carburettor - Carburateur - Vergaser - Carburador



Pag. 24

TAV.14 Attrezzatura specifica - Special tools - Outillage spécial - Spezialwerkzeug - Utillaje especifico

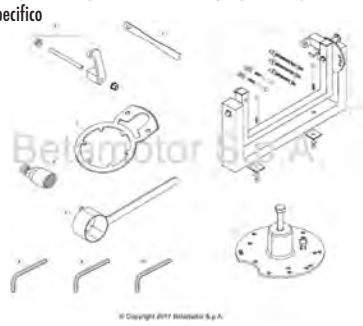

Pag. 26

TAV.31 Telaio - Frame - Chassis - Rahmen - Chasis

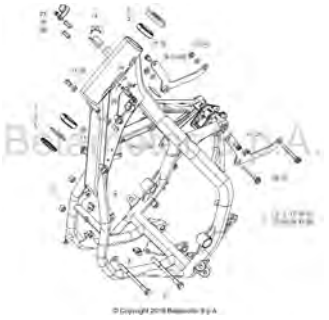

Pag. 28

TAV.32 Accessori telaio - Frane accessories - Accessoires chassis - Rahmenzubehören - Accesorios Chasis



Pag. 30

TAV.33A Ammortizzatore posteriore - Rear damper - Amortisseur arriere - Hinterer Stoßdämpfer - Amortiguador posterior



Pag. 32

TAV.33B Forcellone posteriore - Rear fork - Fouche arriere - Hinterradschwinge - Horquilla posterior

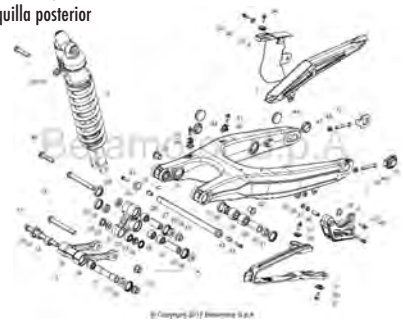

Pag. 34

TAV.34 Forcella anteriore - Front fork - Fourche AV. - Vorderradgabel - Horquilla delantera

STANDARD



Pag. 36

RACING

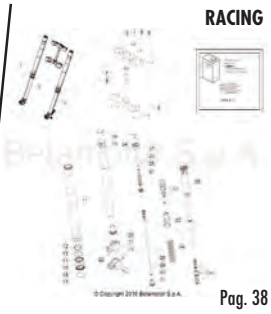

Pag. 38

TAV.35 Comandi-Manubrio - Controls-Handlebars - Commandes-Guidon - Bedienungselemente-Lenker - Mandos-Manillar



Pag. 40

TAV.36 Impianto freni idraulici - Hydraulic brakes system - Installation des freins hydrauliques - Hidraulichebremse anlage - Instalación freno hidráulico



Pag. 42

TAV.37 Gruppo scarico - Exhaust system - Echappement - Auspuffanlage - Grupo escape

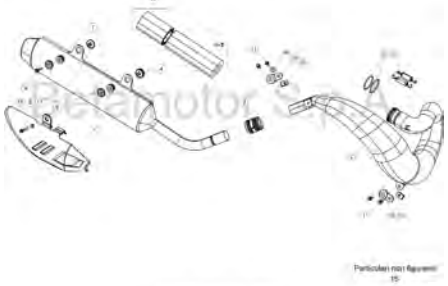

Pag. 44

TAV.38 Scatola filtro - Filter box - Boî tier du filtre - Sicherungskasten - Caja del filtro

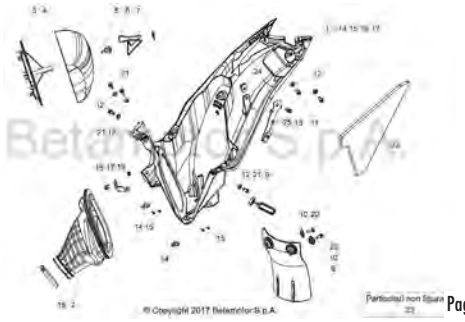

Pag. 45

TAV.39 Impianto di raffreddamento - Installation de refroidissement - Installation de refroidissement - Kühlsystem - Instalación de enfriamiento

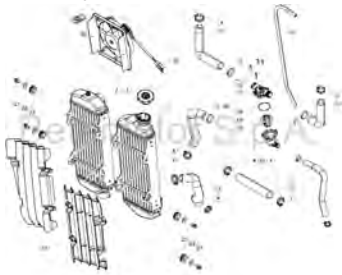

Pag. 46

TAV.40 Impianto elettrico - Electrical equipment - Installation electrique - Elektrische anlage - instalación elecirica



Pag. 48

TAV.41 Ruota anteriore - Front wheel - Roue AV. - Vorderrad - Rueda delantera



Pag. 50

TAV.42 Ruota posteriore - Rear wheel - Roue AR. - Hinterrad - Rueda trasera

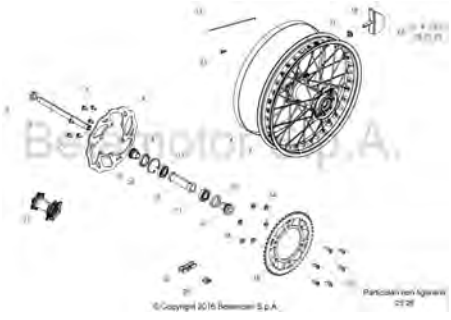

Pag. 51

TAV.43A Carenature-Parafanghi - Mudguards - Carenages-Gardeboues - Verkleidungen-Kotflügeln - Carenados-Guardabarros



Pag. 52

TAV.43B Carenature-Serbatoio-Sella - Fairings-Tank-Saddle - Carenages-Reservoir-Selle - Verkleidungen-Tank-Sattel - Carenados-Deposito-Sillín

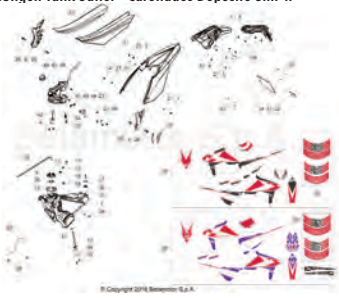

Pag. 54

TAV.44 Attrezzatura specifica - Special tools - Outillage spécial - Spezialwerkzeug - Utillaje especifico



Pag. 56

Tav.01A

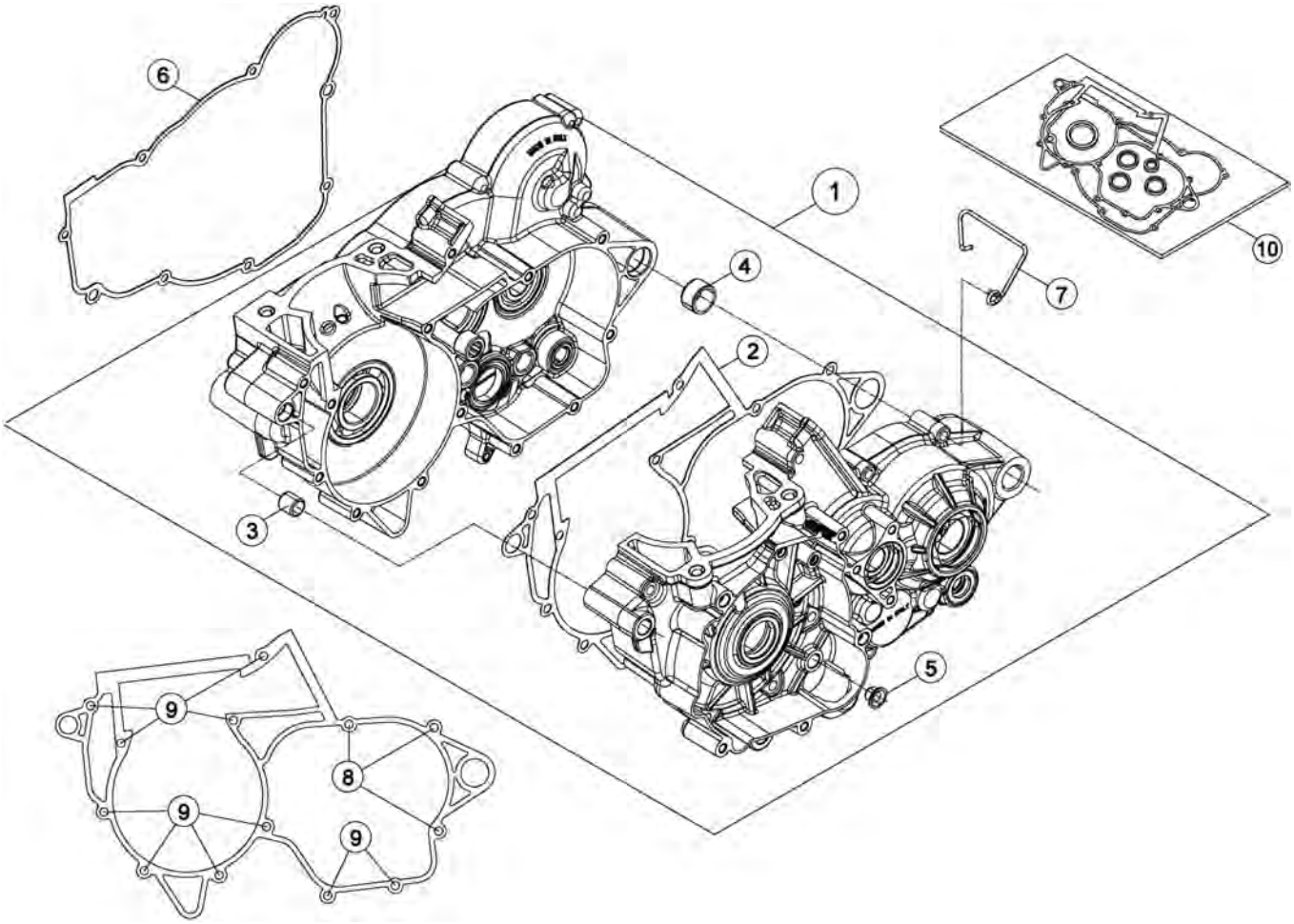

Tav.01A

Pos Loc Pos Ps Pos	Numero Number Numéro Número Nummer	Q.tà Q.ty Q.té M.ge C.ad	Nota Note Note Nota Anm.	Descrizione	Description	Désignation	Beschreibung	Descripciòn
1	026.01.021.80.00	1		Carter motore	Crankcase assy	Carter moteur complet	Kurbekgehä use, kompl.	Carter motor completo
2	026.01.003.00.00	1		Guarnizione carter	Crankcase gasket	Joint carter	Dichtung Kurbelwellengehä use	Junta cá rter
3	16.41500.000	1		Grano di riferimento	Dowel	Repè re	Passtift	Centraje
4	006.01.012.00.00	1		Grano di riferimento 17x21.12	Dowel 17x21.12	Repè re 17x21.12	Passtift 17x21.12	Centraje 17x21.12
5	C03.02.001.00.00	1		Boccola 8x10x8	Bush 8x10x8	Moyeu 8x10x8	Bü chse 8x10x8	Buje 8x10x8
6	026.01.005.00.00	1		Guarnizione coperchio frizione	Clutch cover gasket	Joint couvercle embrayage	Dichtung Kupplungabdeckung	Junta tapa embrague
7	006.01.023.00.00	1		Passacavo	Grommet	Passe-câ ble	Kabeldurchgang	Pasacables
8	11.50360.000	3		Bullone M6x40	Bolt M6x40	Boulon M6x40	Bolzen M6x40	Tornillo M6x40
9	11.05535.000	10		Bullone 6.50 rs ch 8	Bolt 6.50 rs ch 8	Boulon 6.50 rs ch 8	Bolzen 6.50 rs ch 8	Tornillo 6.50 rs ch 8
10	036.01.010.82.00	1		Kit guarnizioni	Packings kit	Jeu joints	Dichtungenssatz	Grupo juntas

Tav.01B

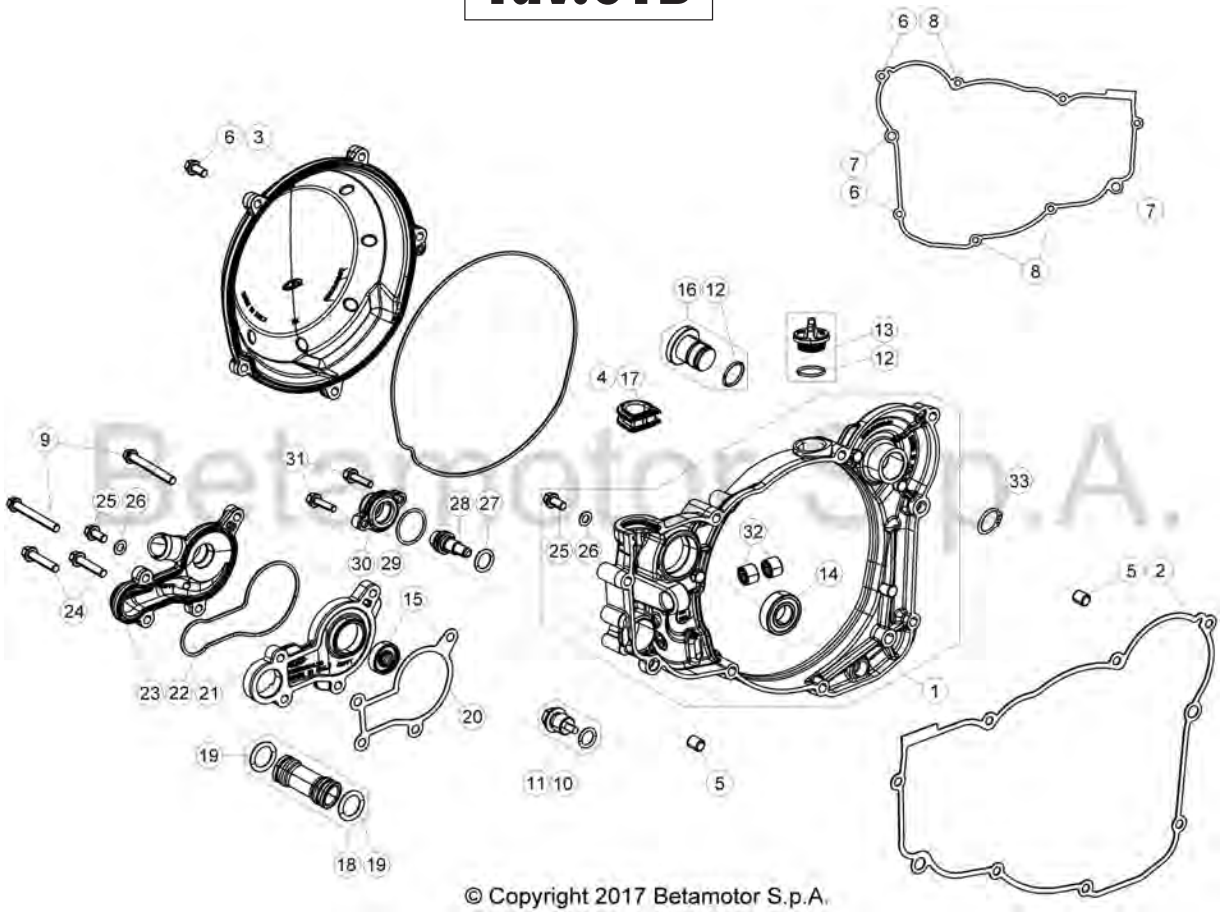

© Copyright 2017 Betamotor S.p.A.

Pos Loc Pos Ps Pos	Numero Number Numéro Número Nummer	Q.tà Q.ty Q.té M.ge C.ad	Nota Note Note Nota Anm.	Descrizione	Description	Désignation	Beschreibung	Descripción
1	026.01.020.80.52	1		Coperchio frizione interno	Inner clutch cover	Couvercle interne d' embrayage	Innerer Kupplungsdeckel	Tapa interior embrague
2	026.01.005.00.00	1		Guarnizione coperchio frizione	Clutch cover gasket	Joint couvercle embrayage	Dichtung Kupplungabdeckung	Junta tapa embrague
3	026.01.018.80.52	1		Coperchio frizione esterno	Outer clutch cover	Couvercle externe d' embrayage	Äußerer Kupplungsdeckel	Tapa exterior embrague
4	026.01.041.00.00	1		Guarnizione coperchio frizione	Clutch cover gasket	Joint couvercle embrayage	Dichtung Kupplungabdeckung	Junta tapa embrague
5	16.36500.000	2		Grano 9x7,2x10	Dowel 9x7,2x10	Goujon 9x7,2x10	Stift 9x7,2x10	Clavija 9x7,2x10
6	11.49070.000	4		Bullone 6x20 ch rs	Bolt 6x20 ch rs	Boulon 6x20 ch rs	Bolzen 6x20 ch rs	Tornillo 6x20 ch rs
7	11.50300.000	2		Bullone 6x30 ch rs	Bolt 6x30 ch rs	Boulon 6x30 ch rs	Bolzen 6x30 ch rs	Tornillo 6x30 ch rs
8	11.05535.000	3		Bullone 6.50 rs ch 8	Bolt 6.50 rs ch 8	Boulon 6.50 rs ch 8	Bolzen 6.50 rs ch 8	Tornillo 6.50 rs ch 8
9	11.05485.000	2		Bullone M6x60 rs ch 8	Bolt M6x60 rs ch 8	Boulon M6x60 rs ch 8	Bolzen M6x60 rs ch 8	Tornillo M6x60 rs ch 8
10	10.66164.000	1		Anello Or 11x2,5 nbr70 sh	O-Ring 11x2,5 nbr70 sh	Bague d' étanchéité 11x2,5	O-Ring 11x2,5 nbr70 sh	Anillo OR 11x2,5 nbr70 sh
11	006.08.152.80.00	1		Tappo scarico olio	Oil exh. plug	Bouchon dech. huile	Oelablasschraube	Tapón de descarge aceite
12	10.66321.000	2		Anello OR	O-Ring	Bague d' étanchéité	O-Ring	Anillo OR
13	026.01.019.80.59	1		Tappo carico olio	Oil filler cap	Bouchon remplissement huile	Ölverschluß	Tapón llenado aceite
13	026.01.025.80.53	1	RACING	Tappo carico olio	Oil filler cap	Bouchon remplissement huile	Ölverschluß	Tapón llenado aceite
14	C06.01.001.00.00	1		Cuscinetto 15.32.9 6002-2RSH C3	Bearing 15.32.9 6002-2RSH C3	Roulement 15.32.9 6002-2RSH C3	Lager 15.32.9 6002-2RSH C3	Cojinete 15.32.9 6002-2RSH C3
15	10.43720.000	1		Anello paraolio 8.24.7	Oil seal 8.24.7	Joint d' étanchéité 8.24.7	Ölschutzring 8.24.7	Retén de aceite 8.24.7
16	036.01.006.80.59	1		Tappo completo	Cap assy.	Bouchon complet	Verschluß kpl.	Tapón completo
17	026.01.031.80.00	1		Guarnizione asta valvola	Valve stem seal	Joint d' etanch. de tige de soupape	Ventilshaftdichtung	Sello de vastago de valvula
18	026.01.037.80.00	1		Tubo acqua	Water pipe	Tuyau de l' eau	Kühlflüssigkeitsleitung	Tubo agua
19	C02.06.052.00.00	2		Anello OR 17,96x2,62	O-Ring 17,96x2,62	Bague d' étanchéité 17,96x2,62	O-Ring 17,96x2,62	Anillo OR 17,96x2,62
20	026.01.036.00.00	1		Guarnizione pompa acqua	Water pump gasket	Joint pompe eau	Dichtung Wasserpumpe	Empaque bomba agua
21	026.01.034.00.00	1		Corpo pompa acqua	Water pump plunger cylinder	Cylindre de plongeur pompe eau	Wasserpumpengehäuse	Cuepo bomba agua
22	026.01.035.00.00	1		Guarnizione pompa acqua	Water pump gasket	Joint pompe eau	Dichtung Wasserpumpe	Empaque bomba agua
23	026.01.033.00.00	1		Coperchio pompa acqua	Water pump cover	Couvercle pompe à eau	Wasserpumpendeckel	Tapa bomba agua
24	11.50300.000	2		Bullone 6x30 ch rs	Bolt 6x30 ch rs	Boulon 6x30 ch rs	Bolzen 6x30 ch rs	Tornillo 6x30 ch rs
25	11.47015.000	2		Bullone M6x12	Bolt M6x12	Boulon M6x12	Bolzen M6x12	Tornillo M6x12
26	27.40495.000	2		Rondella in rame 6.11	Copper washer 6.11	Rondelle en cuivre 6.11	Kupfer U.Scheibe 6.11	Arandela de cobre 6.11
27	10.66296.000	1		Anello OR 12,37.2,62	O-Ring 12,37.2,62	Bague d' étanchéité 12,37.2,62	O-Ring 12,37.2,62	Anillo OR 12,37.2,62
28	026.09.023.42.00	1		Guida molla regolabile	Adjustable spring guide	Guide ressort réglable	Einstellbare Federfuehrung	Guia de resorte ajustable
29	10.66540.000	1		Anello OR 24.2	O-Ring 24.2	Bague d' étanchéité 24.2	O-Ring 24.2	Anillo OR 24.2
30	026.09.025.00.00	1		Coperchio	Cover	Couvercle	Deckel	Tapa
31	11.46401.000	2		Bullone M5x20	Bolt M5x20	Boulon M5x20	Bolzen M5x20	Tornillo M5x20
32	11.22100.000	2		Boccola a rulli 10.14.10	Roller bearing 10.14.10	Douille à roulements	Rollenbuchse	Caja de grasa de rodillos
33	33.00070.000	1		Seeger D.19	Circlip D.19	Circlip D.19	Seeger D.19	Seeger D.19

Tav.01C

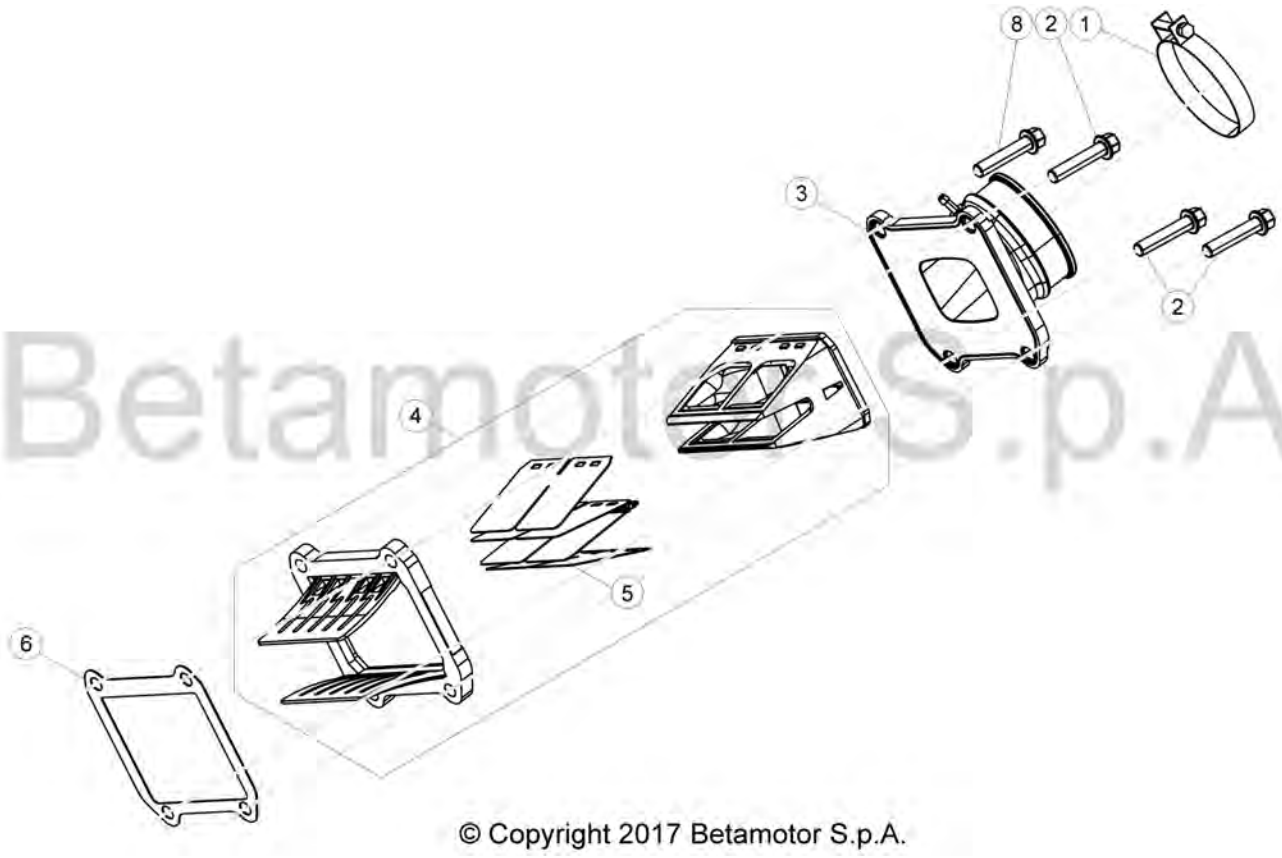

Betamotor S.p.A.

© Copyright 2017 Betamotor S.p.A.

Pos Loc Pos Ps Pos	Numero Number Numéro Número Nummer	Q.tà Q.ty Q.té M.ge C.ad	Nota Note Note Nota Anm.	Descrizione	Description	Désignation	Beschreibung	Descripción
1	15.14275.000	1		Fascetta 52/12	Clamp 52/12	Collier 52/12	Schelle 52/12	Abrazadera 52/12
2	11.50010.000	3		Bullone M6x25	Bolt M6x25	Boulon M6x25	Bolzen M6x25	Tornillo M6x25
3	036.01.005.80.00	1		Collettore carburatore	CArburetor inlet duct	Conduit adm. carburateur	Ansaugstutzen Vergaser	Colector Carburador
3	026.01.006.00.00	1	RACING	Collettore carburatore	CArburetor inlet duct	Conduit adm. carburateur	Ansaugstutzen Vergaser	Colector Carburador
4	026.01.007.80.00	1		Pacco lamellare	Leaf valve	Pyramide clapets	Lamellenpaket	Válvula láminas
5	026.01.009.00.00	1		Kit lamelle	Plate kit	Kit lamelle	Plättchenkit	Kit Laminilla
6	026.01.010.00.00	1		Guarnizione pacco lamellare	Leaf valve gasket	Joint pyramide clapets	Dichtung Lamellenpaket	Junta válvula láminas
8	026.11.035.00.00	1		Vite di sicurezza	Tab screw	Vis de sûreté	Sicherungs-Schraube	Tornillo de seguridad

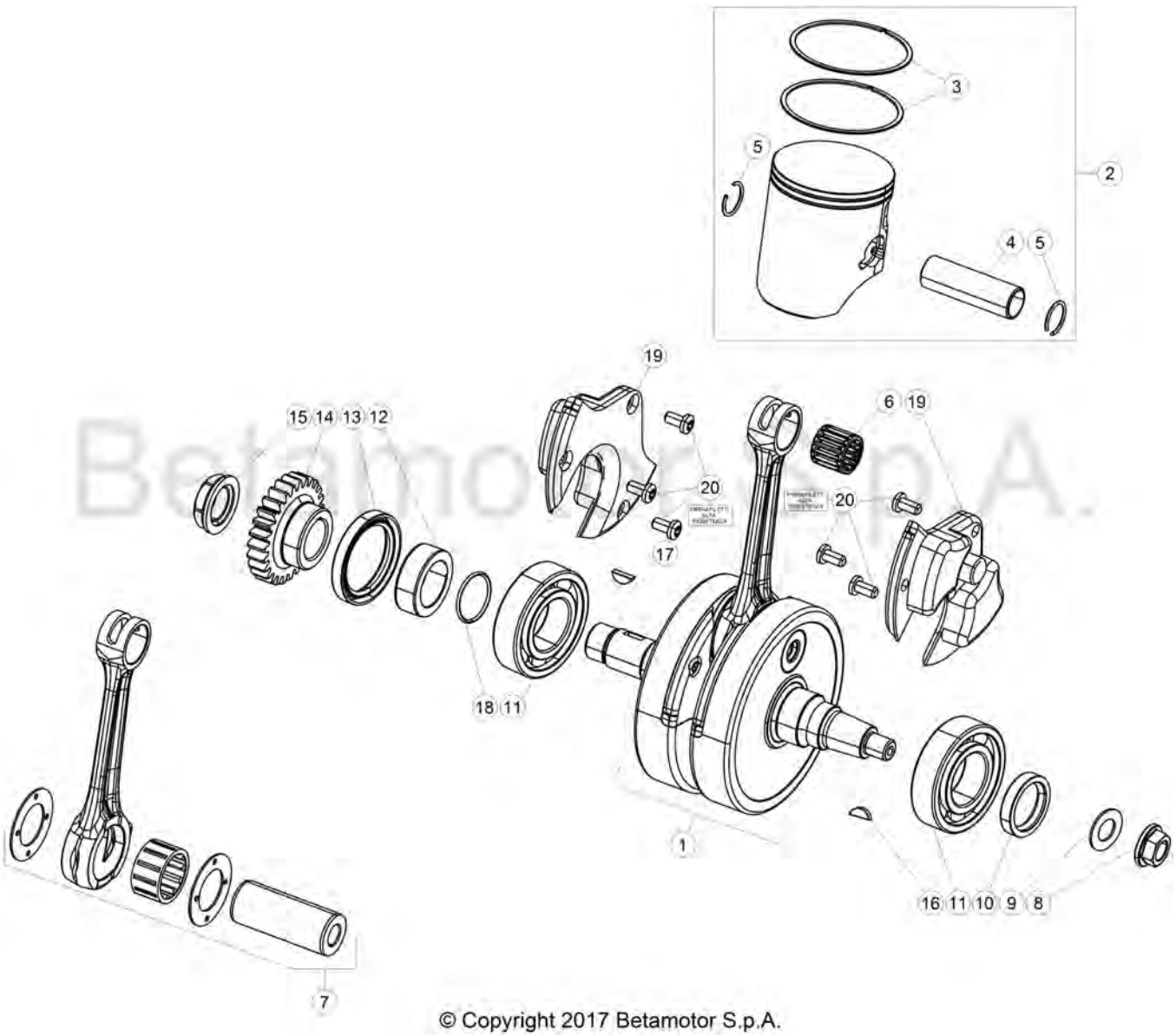

© Copyright 2017 Betamotor S.p.A.

Tav.02

Pos Loc Pos Ps Pos	Numero Number Numéro Número Nummer	Q.tà Q.ty Q.té M.ge C.ad	Nota Note Note Nota Anm.	Descrizione	Description	Désignation	Beschreibung	Descripción
1	026.02.015.80.00	1		Albero motore completo	Crankshaft, assy.	Arbre moteur complet	Kurbelwelle, komplett	Cigüeñal completo
2	026.02.026.80.0A	1	250cc 250RACING	Pistone completo 250cc - Sel. A	Piston set 250cc - Sel. A	Piston compl. 250cc - Sél. A	Kolben, kompl. 250cc - Auswahl A	Pistón, compl. 250cc - Sel. A
2	026.02.026.80.0B	1	250cc 250RACING	Pistone completo 250cc - Sel. B	Piston set 250cc - Sel. B	Piston compl. 250cc - Sél. B	Kolben, kompl. 250cc - Auswahl B	Pistón, compl. 250cc - Sel. B
2	026.02.026.80.0C	1	250cc 250RACING	Pistone completo 250cc - Sel. C	Piston set 250cc - Sel. C	Piston compl. 250cc - Sél. C	Kolben, kompl. 250cc - Auswahl C	Pistón, compl. 250cc - Sel. C
2	026.02.033.80.0A	1	300cc 300RACING	Pistone completo 300cc - Sel. A	Piston set 300cc - Sel. A	Piston compl. 300cc - Sél. A	Kolben, kompl. 300cc - Auswahl A	Pistón, compl. 300cc - Sel. A
2	026.02.033.80.0B	1	300cc 300RACING	Pistone completo 300cc - Sel. B	Piston set 300cc - Sel. B	Piston compl. 300cc - Sél. B	Kolben, kompl. 300cc - Auswahl B	Pistón, compl. 300cc - Sel. B
2	026.02.033.80.0C	1	300cc 300RACING	Pistone completo 300cc - Sel. C	Piston set 300cc - Sel. C	Piston compl. 300cc - Sél. C	Kolben, kompl. 300cc - Auswahl C	Pistón, compl. 300cc - Sel. C
3	026.02.025.00.00	2	250cc 250RACING	Segmento pistone 250cc	Piston ring 250cc	Segment de piston 250cc	Kolbendichtring 250cc	Aro piston 250cc
3	026.02.031.00.00	2	300cc 300RACING	Segmento pistone 300cc	Piston ring 300cc	Segment de piston 300cc	Kolbendichtring 300cc	Aro piston 300cc
4	026.02.023.00.00	1		Spinotto	Pin	Axe	Zapfen	Eje
5	10.42600.000	2		Anello ferma spinotto	Piston pin lock ring	Bague de serrage goujon	Bolzenfeststellring	Anillo sujeta pasador
6	16.16710.000	1		Gabbia	Cage	Cage	Lagerkäfig	Jaula
7	026.02.019.80.00	1		Biella completa	Conn.-rod, assy	Bielle compl.	Pleuel, kompl.	Biela compl.
8	13.25010.000	1		Dado M12x1	Nut M12x1	Ecrou M12x1	Mutter M12x1	Tuerca M12x1
9	27.74810.000	1		Rondella elastica	Spring Washer	Rondelle élastique	Federring	Arandela elástica
10	C02.01.041.00.00	1		Anello di tenuta 25.35.7	Oil seal 25.35.7	Joint d'étanchéité 25.35.7	Ölschutzring 25.35.7	Retén de aceite 25.35.7
11	C06.01.035.00.00	2		Cuscinetto	Bearing	Roulement	Lager	Cojinete
12	026.02.009.00.00	1		Distanziale	Spacer	Entretoise	Distanzstück	Distanciador
13	C02.01.042.00.00	1		Anello paraolio 38.52.7 FPM	Oil seal 38.52.7 FPM	Joint d'étanchéité 38.52.7 FPM	Ölschutzring 38.52.7 FPM	Retén de aceite 38.52.7 FPM
14	026.03.004.00.00	1		Pignone trasmissione primaria	Main Drive Sprocket	Pignon Transmission Primaire	Primäraantriebsritzel	Piñón Transmisión Primaria
15	006.03.023.00.00	1		Dado M20X1x5 LH	Nut M20X1x5 LH	Ecrou M20X1x5 LH	Mutter M20X1x5 LH	Tuerca M20X1x5 LH
16	12.46020.000	1		Chiavetta 3x5	Key 3x5	Clavette 3x5	Keil 3x5	Chaveta 3x5
17	12.46151.000	1		Linguetta 4x5 uni 6606	Plate 4x5 uni 6606	Plaquette 4x5 uni 6606	Plättchen 4x5 uni 6606	Lengüeta 4x5 uni 6606
18	10.66620.000	1		Anello or 25,12x1,78	O-Ring 25,12x1,78	Bague d'étanchéité 25,12x1,78	O-Ring 25,12x1,78	Anillo OR 25,12x1,78
19	026.02.003.00.00	2		Inserto albero motore	Crankshaft insert	Elément arbre moteur	Einsatz Kurbelwelle	Encaje cigüeñal
20	C24.91.002.00.00	6		Vite 6.12 TORX	Screw 6.12 TORX	Vis 6.12 TORX	Schraube 6.12 TORX	Tornillo 6.12 TORX

Tav.03

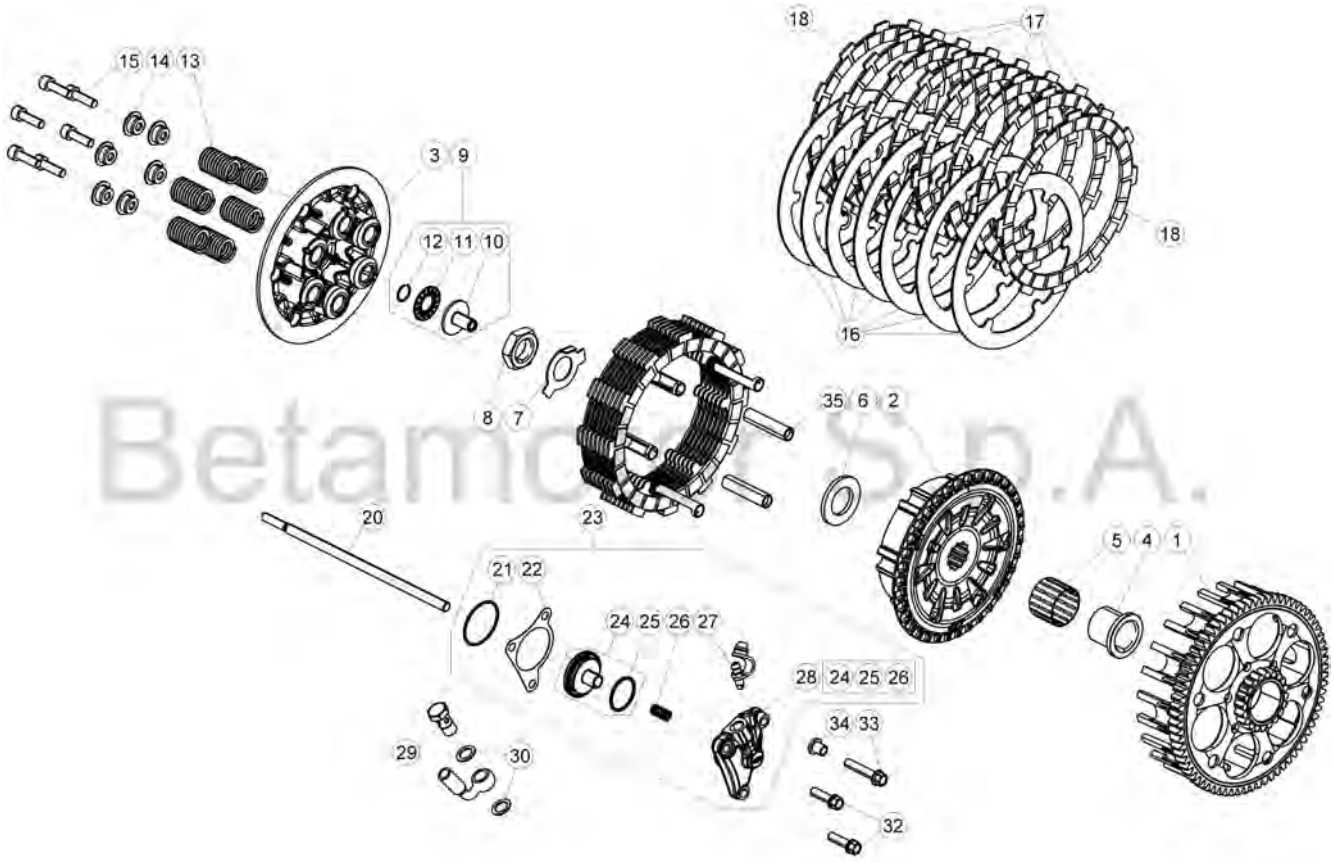

© Copyright 2017 Betamotor S.p.A.

Tav.03

Pos Loc Pos Ps Pos	Numero Number Numéro Número Nummer	Q.tà Q.ty Q.té M.ge C.ad	Nota Note Note Nota Anm.	Descrizione	Description	Désignation	Beschreibung	Descripciòn
1	029.03.011.00.00	1		Corona trasmissione primaria	Clutch case assembly	Cloche d' embrayage compl.	Kupplungsglocke.	Campana de embr.completa
2	029.03.141.00.00	1		Mozzo frizione	Clutch drum	Moyeu d' embr.	Kupplungstrommel	Tambor de embr.
3	029.03.031.00.00	1		Piattello spingidisco	Spring collar	Godet d' embrayage	Druckteller	Platillo embrague
4	026.03.061.00.00	1		Boccola	Bush	Moyeu	Büchse	Buje
5	006.03.063.00.00	1		Boccola a rulli 26x30.22	Roller bearing 26x30.22	Douille à roulements 26x30.22	Rollenbuchse 26x30.22	Caja de grasa de rodillos 26x30.22
6	006.03.062.00.00	1		Rondella 21,7x38.3.	Washer 21,7x38.3.	Rondelle 21,7x38.3.	U.Scheibe 21,7x38.3.	Arandela 21,7x38.3.
7	029.03.000.48.00	1		Rondella di sicurezza	Tab washer	Rondelle de sûreté	Sicherungs-Unterlegscheibe	Arandela de seguridad
8	006.03.065.00.00	1		Dado M18x1,5 h9	Nut M18x1,5 h9	Ecrou M18x1,5 h9	Mutter M18x1,5 h9	Tuerca M18x1,5 h9
9	029.03.071.80.00	1		Innesto Frizione	Clutch Coupling	Crabot Embrayage	Stabeinklupplung Kupplungskörper	Acople Embrague
10	029.03.071.00.00	1		Innesto Asta Comando Frizione	Clutch Housing Rod Coupling	Crabot Tige Corps Embrayage	Stabeinklupplung Kupplungskörper	Acople Varilla Cuerpo Embrague
11	16.11370.000	1		Gabbia reggispinta 15x28x2 con 1AS	Thrust bearing cage 15x28x2 with 1AS	Butée à aguilles 15x28x2 avec 1AS	Andruckkäfig 15x28x2 mit 1AS	Jaula cojinete de empuje 15x28x2 con 1AS
12	28.23105.000	1		Seeger RB14 DIN 7993	Circlip RB14 DIN 7993	Circlip RB14 DIN 7993	Seeger RB14 DIN 7993	Seeger RB14 DIN 7993
13	029.03.055.00.00	6		Molla frizione	Clutch spring	Ressort embr.	Kupplg.feder	Muelle embr.
14	029.03.056.00.00	6		Reggimolla Frizione	Spring Retainer	Porte-Ressort Embrayage	Federteller	Portamuelle Embrague
15	31.34510.000	6		Vite M6x20 TCCE	Screw M6x20 TCCE	Vis M6x20 TCCE	Schraube M6x20 TCCE	Tornillo M6x20 TCCE
16	029.03.150.00.00	7		Disco condotto	Driven plate	Disque entrainé	Scheibe getrieben	Disco conducido
17	029.03.053.00.00	6		Disco conduttore	Driving plate	Disque menant	Scheibe treibend	Disco conductor
18	029.03.054.00.00	2		Disco conduttore	Driving plate	Disque menant	Scheibe treibend	Disco conductor
20	026.03.070.00.00	1		Astina frizione	Clutch fl. dipstick	Axe embrayage	Kupplungsstange	Varita embrague
21	10.66840.000	1		Anello OR 33x1,5	O-Ring 33x1,5	Bague d' étanchéité 33x1,5	O-Ring 33x1,5	Anillo OR 33x1,5
22	006.03.085.00.00	1		Guarnizione frizione	Clutch lining	Garniture embrayage	Kupplungsbelag	Forro de embrague
23	029.03.001.80.00	1		Cilindro attuatore frizione	Clutch actuator cylinder	Cylindre actionneur embrayage	Zykubder Stellantrieb Kupplungs	Cilindro del actuador embrague
24	006.03.281.80.00	1		Pistone attuatore innesto frizione	Clutch actuator piston	Piston actionneur embrayage	Kolben Stellantrieb Kupplungs	Pistón del actuador embrague
25	10.66520.000	1		Anello OR 23,52x1,78	O-Ring 23,52x1,78	Bague d' étanchéité 23,52x1,78	O-Ring 23,52x1,78	Anillo OR 23,52x1,78
26	006.03.083.00.00	1		Molla	Spring	Ressort	Feder	Muelle
27	28.91050.000	1		Tappo sfiato	Breather plug	Bouchon reniflard	Verschluß Entlüfter	Tapón respiradero
28	029.03.001.00.00	1		Cilindro attuatore frizione	Clutch actuator cylinder	Cylindre actionneur embrayage	Zykubder Stellantrieb Kupplungs	Cilindro del actuador embrague
29	11.65040.000	1		Bullone forato 10x1 x tubo freno	Special bolt	Boulon 10x1 x tube frein	Hohlschraube F.Bremse	Tornillo esp. talad.10.1
30	16.50510.000	2		Guarnizione 10x15x1 in rame	Gasket 10x15x1 copper	Joint 10x15x1 cuivre	Dichtung 10x15x1 Kupfer	Junta 10.15.1 (cobre)
32	11.49070.000	2		Bullone 6x20 ch rs	Bolt 6x20 ch rs	Boulon 6x20 ch rs	Bolzen 6x20 ch rs	Tornillo 6x20 ch rs
33	11.50355.000	1		Bullone 6x35 rs ch8	Bolt 6x35 rs ch8	Boulon 6x35 rs ch8	Bolzen 6x35 rs ch8	Tornillo 6x35 rs ch8
34	13.49190.000	1		Distanziale 10mm	Spacer 10mm	Entretoise 10mm	Distanzstück 10mm	Distanciador 10mm
35	029.03.107.00.00	6		Guida disco	Plate guide	Guide-disque	Scheibeführung	Guía disco

Tav.04A

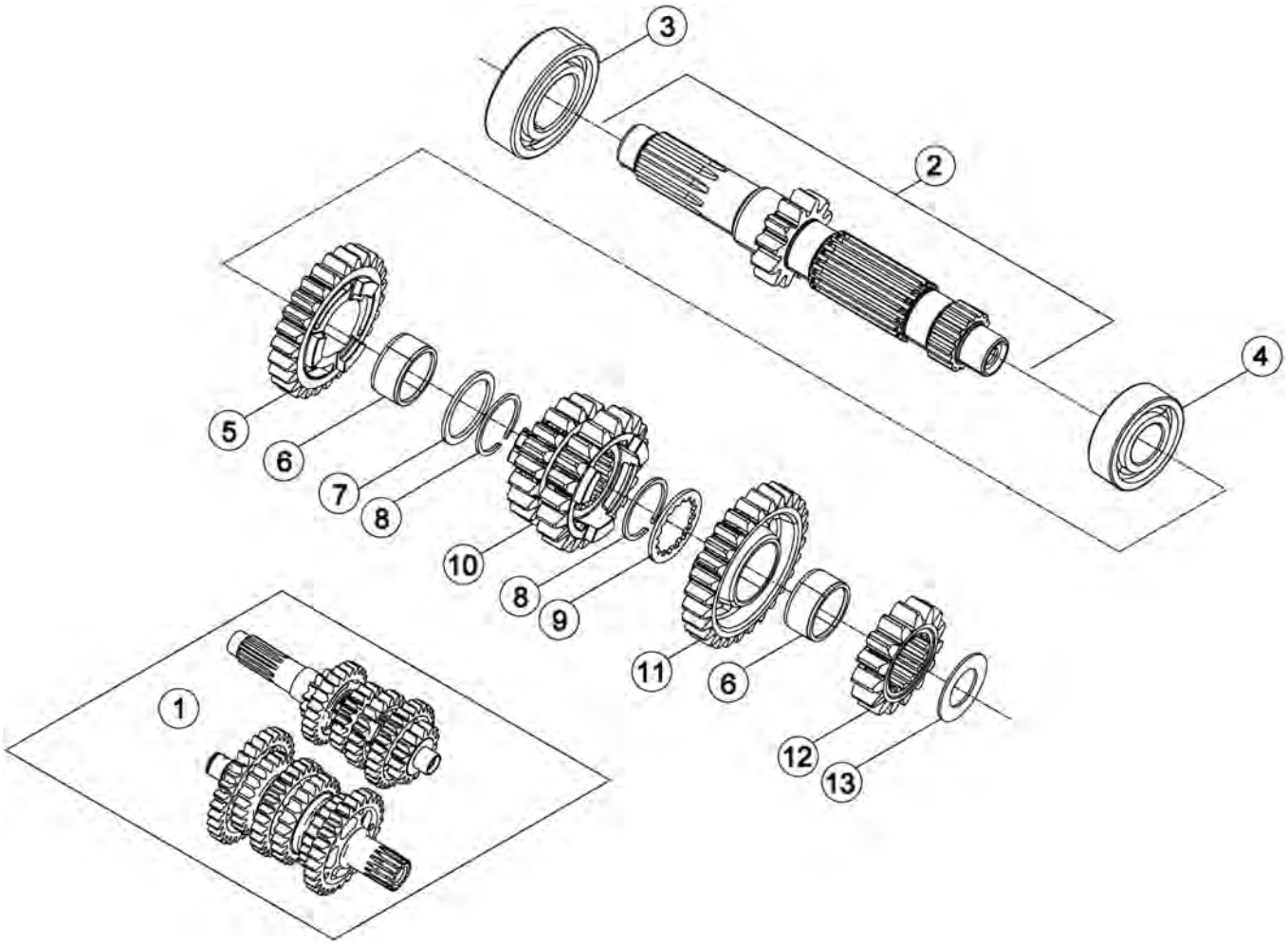

Pos Loc Pos Ps Pos	Numero Number Numéro Número Nummer	Q.tà Q.ty Q.té M.ge C.ad	Nota Note Note Nota Anm.	Descrizione	Description	Désignation	Beschreibung	Descripciòn
1	026.04.000.80.00	1		Cambio completo	Transmission, assy	Boî te de vitesses	Getriebe komplett	Cambio completo
2	026.04.010.00.00	1		Albero primario completo	Complete main shaft	Arbre primaire complet	Komplette Hauptwelle	Arbol primario completo
3	12.95610.000	1		Cuscinetto 6205	Bearing 6205	Roulement 6205	Lager 6205	Cojinete 6205
4	12.95605.000	1		Cuscinetto 6203	Bearing 6203	Roulement 6203	Lager 6203	Cojinete 6203
5	006.04.015.00.00	1		Quinta sul primario	Fifth gear - mainshaft	Cinquiè me sur le primaire	5. Gang auf antriebswelle	Quinta marcha en el cigü eñ al primario
6	11.22855.000	2		Gabbia a rulli 22x26x13	Roller cage 22x26x13	Cage a roul. 22x26x13	Rollenkä fig 22x26x13	Jaula de rod. 22x26x13
7	006.04.031.00.00	1		Rondella rasamento	Thrust washer	Rondelle de buté e	Anlaufscheibe	Arandela distanciadora
8	28.25520.000	2		Seeger 25 SW	Circlip 25 SW	Circlip 25 SW	Seeger 25 SW	Seeger 25 SW
9	006.04.030.00.00	1		Rondella rasamento	Thrust washer	Rondelle de buté e	Anlaufscheibe	Arandela distanciadora
10	006.04.013.00.00	1		Terza e quarta sul primario	Third and fourth gear - mainshaft	Troisiè me et quatriè me sur le primaire	3. Gang Und 4. Gang auf antriebswelle	Tercera y Cuarta marcha en el cigü eñ al primario
11	006.04.016.00.00	1		Sesta sul primario	6th gear - mainshaft	Sixiè me sur le primaire	6. Gang auf antriebswelle	Sexsta marcha en el cigü eñ al primario
12	006.04.012.00.00	1		Seconda sul primario	Second gear - mainshaft	Deuxiè me sur le primaire	2. Gang auf abtriebswelle	Segunda marcha en el cigü eñ al primario
13	006.04.032.00.00	1		Rondella rasamento 17x30x1	Thrust washer 17x30x1	Rondelle de buté e 17x30x1	Anlaufscheibe 17x30x1	Arandela distanciadora 17x30x1

Tav.04B

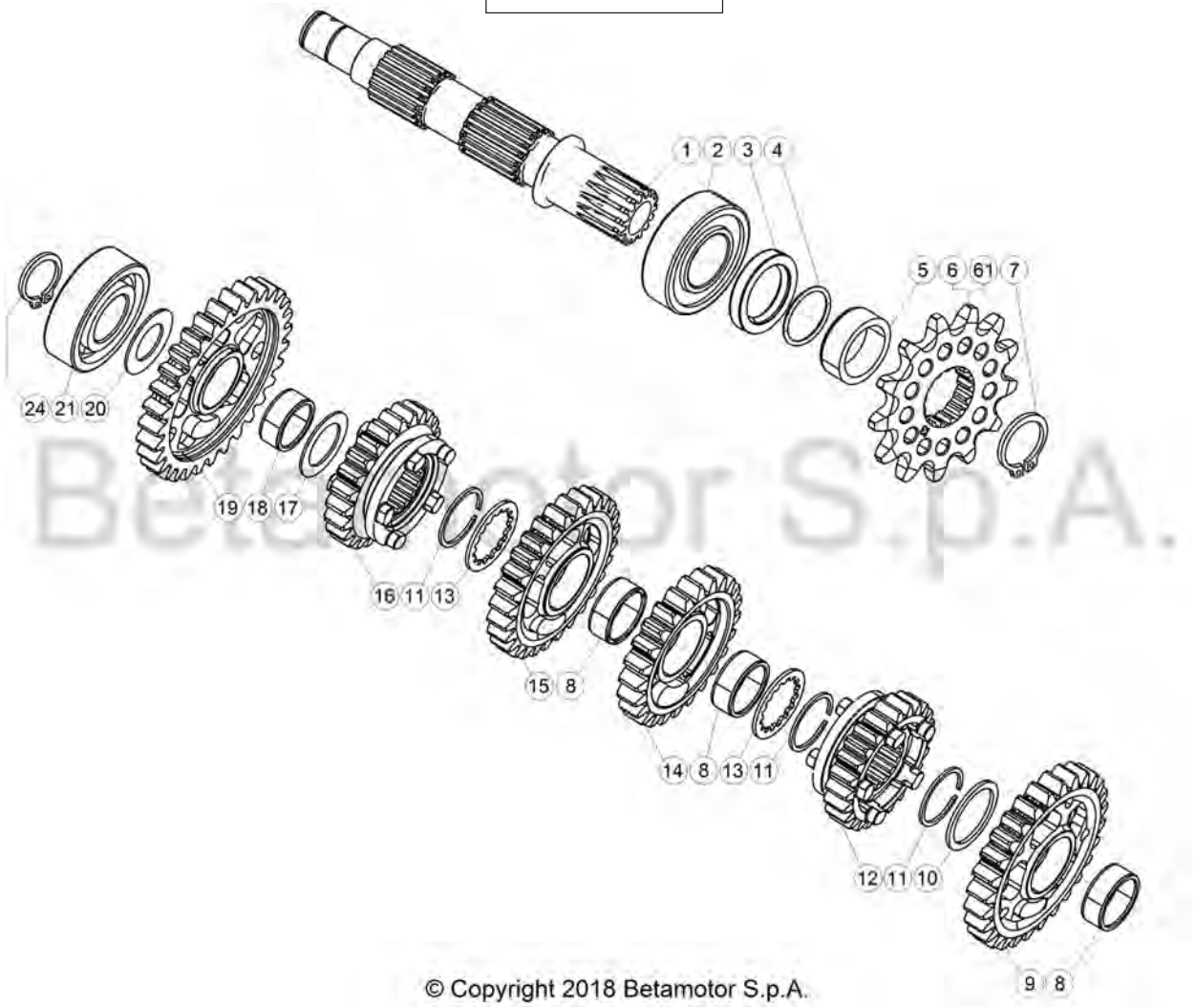

© Copyright 2018 Betamotor S.p.A.

Pos Loc Pos Ps Pos	Numero Number Numéro Número Nummer	Q.tà Q.ty Q.té M.ge C.ad	Nota Note Note Nota Anm.	Descrizione	Description	Désignation	Beschreibung	Descripciòn
1	026.04.020.00.00	1		Albero secondario	Counter shaft	Arbre secondaire	Nebengetriebewelle	Eje secundario
2	12.99710.000	1		Cuscinetto NJ205	Bearing NJ205	Roulement NJ205	Lager NJ205	Cojinete NJ205
3	10.66020.000	1		Anello paraolio 32x45x6x5	Oil seal 32x45x6x5	Joint d' é tanché ité 32x45x6x5	Ölschutzring 32x45x6x5	Reté n de aceite 32x45x6x5
4	10.66540.000	1		Anello OR 24.2	O-Ring 24.2	Bague d' é tanché ité 24.2	O-Ring 24.2	Anillo OR 24.2
5	006.04.040.00.00	1		Distanziale	Spacer	Entretoise	Distanzstü ck	Distanciador
6	006.04.051.00.00	1		Pignone Z=14	Pinion Z=14	Pignon Z=14	Ritzel Z=14	Piñ ó n Z=14
6.1	006.04.052.00.00	1		Pignone Z=15	Pinion Z=15	Pignon Z=15	Ritzel Z=15	Piñ ó n Z=15
7	28.25530.000	1		Anello seeger 25x2	Snap ring 25x2	Circlips 25x2	Seegerring 25x2	Anillo seeger 25x2
8	11.22845.000	3		Gabbia a rulli 22x26x10	Roller cage 22x26x10	Cage a roul. 22x26x10	Rollenkä fig 22x26x10	Jaula de rod. 22x26x10
9	006.04.022.00.00	1		Seconda sul secondario	Second gear - layshaft	Deuxiè me sur le secondaire	2. Gang auf Vorgelegewelle	Segunda marcha en el cigü eñ al sec.
10	006.04.031.00.00	1		Rondella rasamento	Thrust washer	Rondelle de buté e	Anlaufscheibe	Arandela distanciadora
11	28.25520.000	3		Seeger 25 SW	Circlip 25 SW	Circlip 25 SW	Seeger 25 SW	Seeger 25 SW
12	006.04.026.00.00	1		Sesta sul secondario	6th gear - layshaft	Sixiè me sur le secondaire	6. Gang auf Vorgelegewelle	Sexsta marcha en el cigü eñ al sec.
13	006.04.030.00.00	2		Rondella rasamento	Thrust washer	Rondelle de buté e	Anlaufscheibe	Arandela distanciadora
14	006.04.024.00.00	1		Quarta sul secondario	Fourth gear - layshaft	Quatriè me sur le secondaire	4. Gang auf Vorgelegewelle	Cuarta marcha en el cigü eñ al sec.
15	006.04.023.00.00	1		Terza sul secondario	Third gear - layshaft	Troisiè me sur le secondaire	3. Gang auf Vorgelegewelle	Tercera marcha en el cigü eñ al sec.
16	006.04.025.00.00	1		Quinta sul secondario	Fifth gear - layshaft	Cinquiè me sur le secondaire	5. Gang auf Vorgelegewelle	Quinta marcha en el cigü eñ al sec.
17	006.04.033.00.00	1		Rondella rasamento 20x30x1	Thrust washer 20x30x1	Rondelle de buté e 20x30x1	Anlaufscheibe 20x30x1	Arandela distanciadora 20x30x1
18	11.22835.000	1		Gabbia a rulli 20x24x10	Roller cage 20x24x10	Cage a roul. 20x24x10	Rollenkä fig 20x24x10	Jaula de rod. 20x24x10
19	006.04.021.00.00	1		Prima sul secondario	First gear - layshaft	Premiè re sur le secondaire	1. Gang auf Vorgelegewelle	Primera marcha en el cigü eñ al secundario
20	006.04.032.00.00	1		Rondella rasamento 17x30x1	Thrust washer 17x30x1	Rondelle de buté e 17x30x1	Anlaufscheibe 17x30x1	Arandela distanciadora 17x30x1
21	12.95605.000	1		Cuscinetto 6203	Bearing 6203	Roulement 6203	Lager 6203	Cojinete 6203
24	C01.23.001.00.00	1		Seeger 17x1	Circlip 17x1	Circlip 17x1	Seeger 17x1	Seeger 17x1

Tav.05

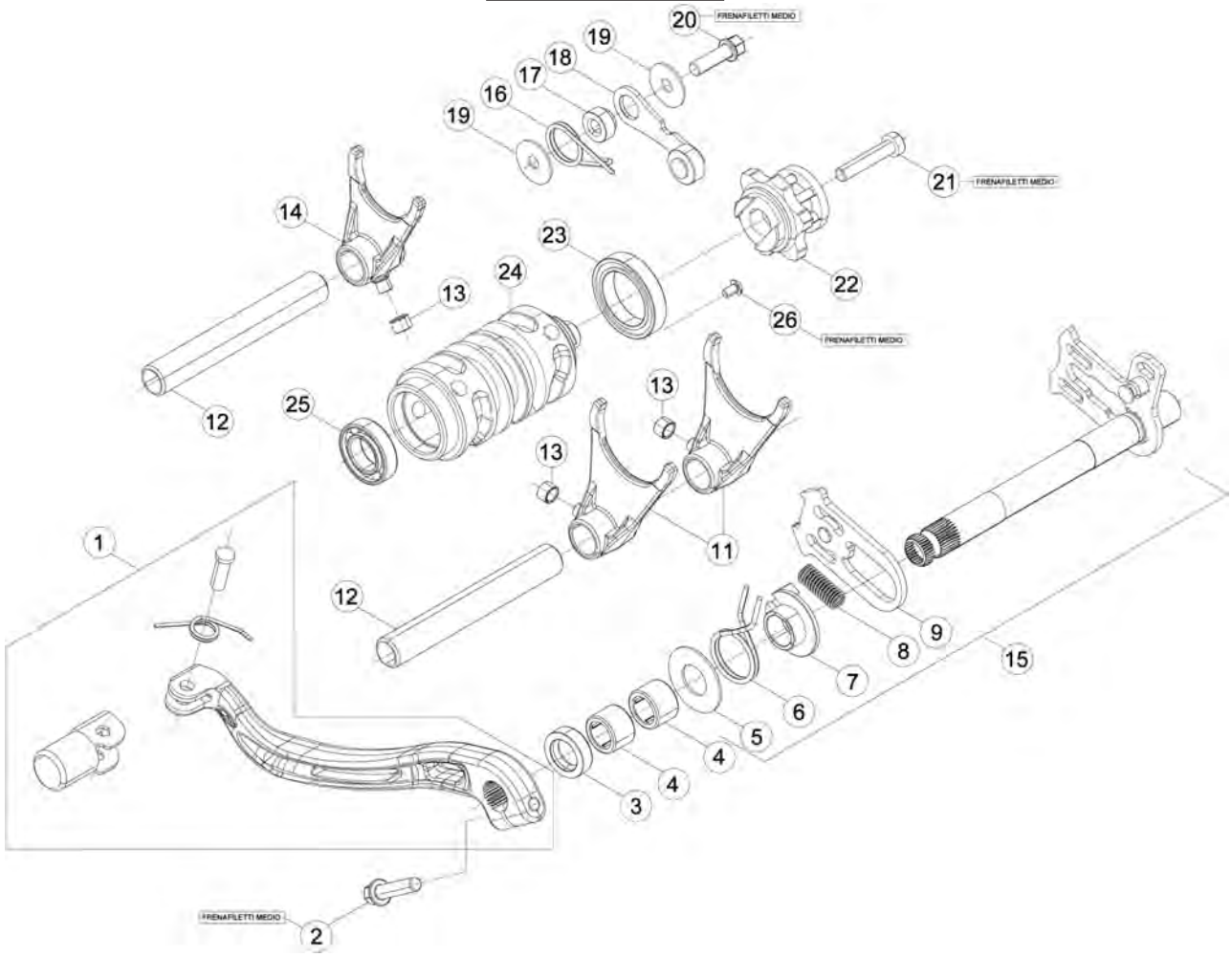

Pos Loc Pos Ps Pos	Numero Number Numéro Número Nummer	Q.tà Q.ty Q.té M.ge C.ad	Nota Note Note Nota Anm.	Descrizione	Description	Désignation	Beschreibung	Descripciòn
1	006.05.000.80.00	1		Leva comando cambio	Gear change lever	Levier comm. chang. vit.	Schalthebel	Palanca cambio
1	006.05.000.80.59	1	RACING	Leva comando cambio	Gear change lever	Levier comm. chang. vit.	Schalthebel	Palanca cambio
2	11.50010.000	1		Bullone M6x25	Bolt M6x25	Boulon M6x25	Bolzen M6x25	Tornillo M6x25
3	10.52012.000	1		Anello paraolio 14x24.6	Oil seal 14x24.6	Joint d' étanché ité 14x24.6	Ölschutzring 14x24.6	Reté n de aceite 14x24.6
4	11.22320.000	2		Boccola a rulli	Roller bearing	Douille à roulements	Rollenbuchse	Caja de grasa de rodillos
5	27.63020.000	1		Rondella rasamento 14x30x1	Thrust washer 14x30x1	Rondelle de buté e 14x30x1	Anlaufscheibe 14x30x1	Arandela distanciadora 14x30x1
6	006.05.017.00.00	1		Molla ritorno comando cambio	Gearchange return spring	Ressort de retour comm. ch.ge vit.	Rü ckstellfeder schaltung	Muelle de retorno cambio
7	16.92911.000	1		Guida molla	Spring guide	Guide ressort	Federfuehrung	Guia de resorte
8	006.05.016.00.00	1		Molla 0,8MM	Spring 0,8MM	Ressort 0,8MM	Feder 0,8MM	Muelle 0,8MM
9	006.05.014.80.00	1		Ventaglio mobile	Movable pawl	Eventail mobile	Schaltautomat	Abanico mó vil
11	006.05.020.00.00	2		Forchetta 1/4	Fork 1/4	Fourchette 1/4	Schaltgabel 1/4	Horquilla 1/4
12	026.05.025.00.00	2		Perno forchetta	Spindle, fork	Axe de fourche	Schaltgabelstift	Perno de la horquilla
13	006.05.027.00.00	3		Boccola 6x8.5,2.	Bush 6x8.5,2.	Moyeu 6x8.5,2.	Bü chse 6x8.5,2.	Buje 6x8.5,2.
14	006.05.021.00.00	1		Forchetta 5/6	Fork 5/6	Fourchette 5/6	Schaltgabel 5/6	Horquilla 5/6
15	026.05.010.80.00	1		Albero cambio compl.	Gear shaft assy.	Arbre Boî te à vitesse compl.	Getriebewelle kpl.	Eje cambio compl.
16	22.39591.000	1		Molla arresto marce	Gear stop spring	Ressort arrê t vit.	Gangstoppfeder	Muelle arresto vel.
17	029.05.054.00.00	1		Distanziale	Spacer	Entretoise	Distanzstü ck	Distanciador
18	026.05.050.80.00	1		Leva arresto marce	Gear stop lever	Levier arrê t vit.	Gangstopphebel	Palanca arresto vel.
19	27.42000.100	2		Rondella 6x20.1,0	Washer 6x20.1,0	Rondelle 6x20.1,0	U.Scheibe 6x20.1,0	Arandela 6x20.1,0
20	11.49070.000	1		Bullone 6x20 ch rs	Bolt 6x20 ch rs	Boulon 6x20 ch rs	Bolzen 6x20 ch rs	Tornillo 6x20 ch rs
21	31.45000.000	1		Vite TCCE 6.30	Screw TCCE 6.30	Vis TCCE 6.30	Schraube TCCE 6.30	Tornillo TCCE 6.30
22	029.05.001.80.00	1		Camma Arresto Marce	Gear Stopper Cam	Came Buté e Vitesses	Gangsperrnocken	Leva Parada Marchas
23	12.93405.000	1		Cuscinetto 61805	Bearing 61805	Roulement 61805	Lager 61805	Cojinete 61805
24	026.05.030.00.00	1		Camma cambio	Selector drum	Barillet de sé lection de boî te de vit.	Schaltwalze	Leva de la caja de cambios
25	12.93840.000	1		Cuscinetto 15x28x7	Bearing 15x28x7	Roulement 15x28x7	Lager 15x28x7	Cojinete 15x28x7
26	31.30084.000	1		Vite M5X8	Screw M5X8	Vis M5X8	Schraube M5X8	Tornillo M5X8

Tav.07

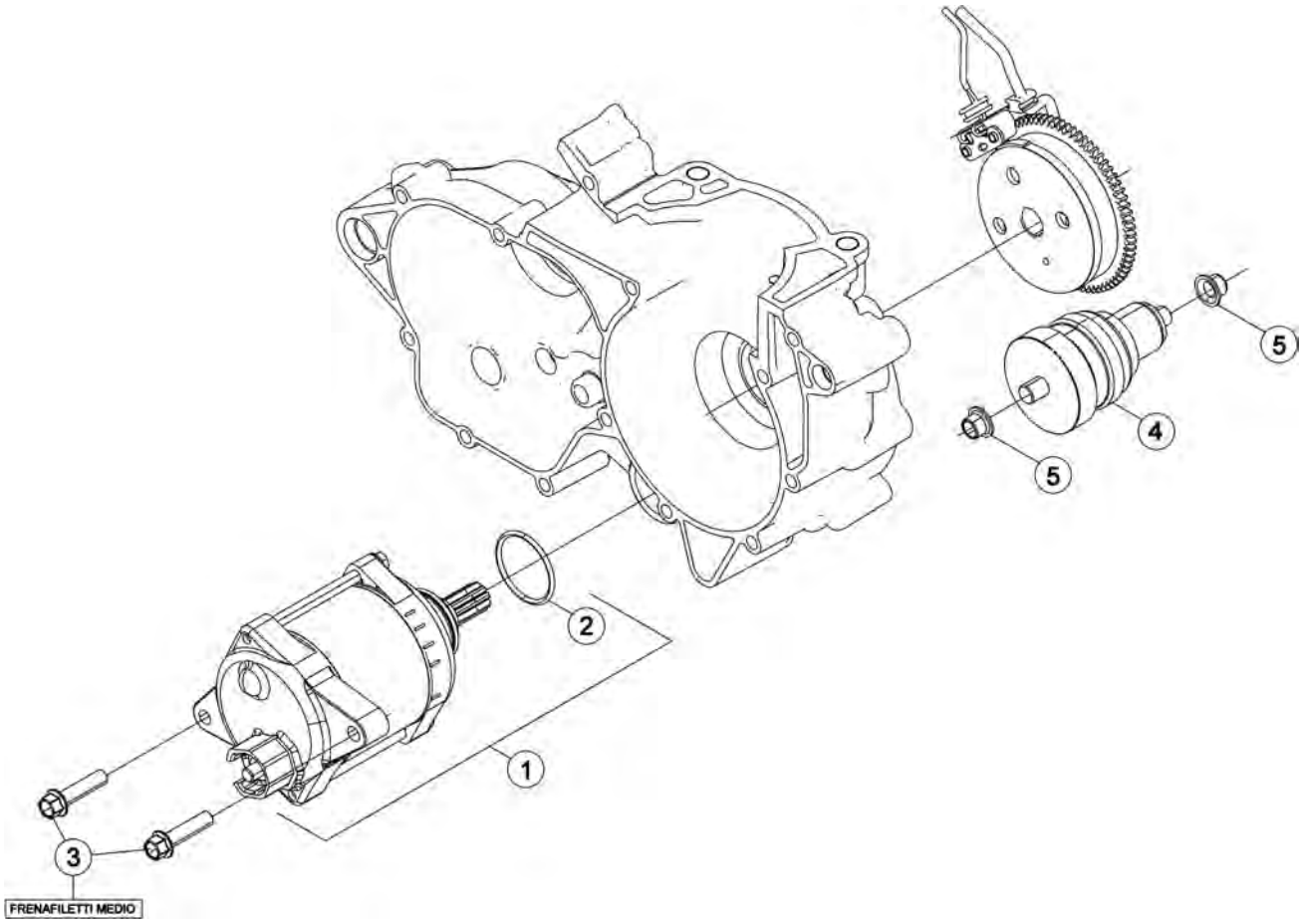

Pos Loc Pos Ps Pos	Numero Number Numéro Número Nummer	Q.tà Q.ty Q.té M.ge C.ad	Nota Note Note Nota Anm.	Descrizione	Description	Désignation	Beschreibung	Descripciòn
1	026.07.000.80.00	1		Motorino avviamento	Starter motor	Moteur du dé marreur	Startermotor	Motor de arranque
2	36.25056.000	1		Anello OR 25,00x3,00	O-Ring 25,00x3,00	Bague d' é tanché ité 25,00x3,00	O-Ring 25,00x3,00	Anillo OR 25,00x3,00
3	11.50010.000	2		Bullone M6x25	Bolt M6x25	Boulon M6x25	Bolzen M6x25	Tornillo M6x25
4	026.07.010.00.00	1		Innesto	Contact tag	Cosse	Stecker	Toma de contacto
5	C03.02.001.00.00	2		Boccola 8x10x8	Bush 8x10x8	Moyeu 8x10x8	Bü chse 8x10x8	Buje 8x10x8

Tav.09

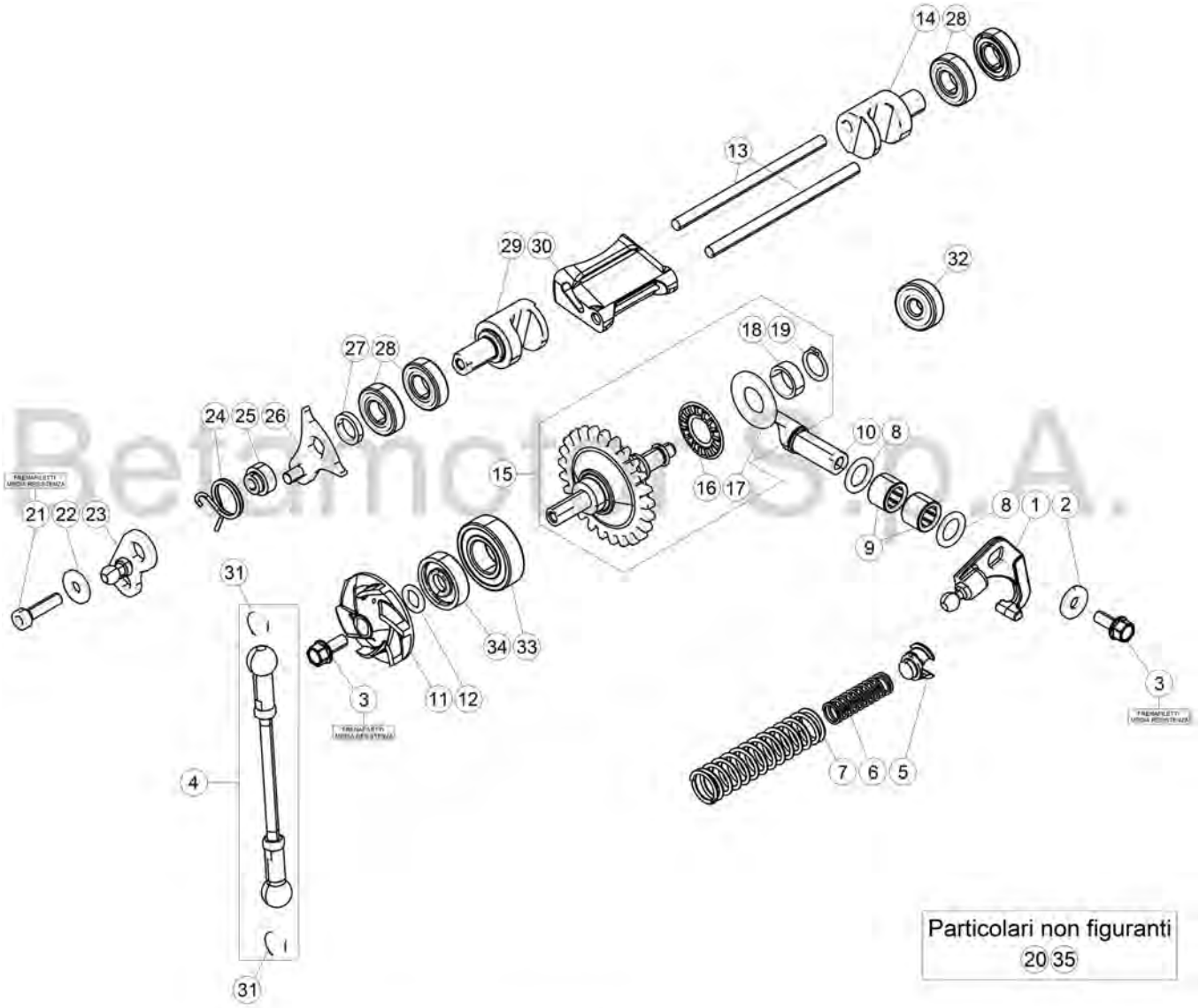

© Copyright 2018 Betamotor S.p.A.

Tav.09

Pos Loc Pos Ps Pos	Numero Number Numéro Número Nummer	Q.tà Q.ty Q.té M.ge C.ad	Nota Note Note Nota Anm.	Descrizione	Description	Désignation	Beschreibung	Descripciòn
1	026.09.013.80.00	1		Bilanciere compl.	Rocker arm assy	Culbuteur compl.	Kipphebel kpl.	Balancín compl.
2	C16.02.001.00.00	1		Rondella 5.15.2	Washer 5.15.2	Rondelle 5.15.2	U.Scheibe 5.15.2	Arandela 5.15.2
3	11.46251.000	2		Bullone flangiato M5x12	Head Flanged bolt M5x12	Boulon Bridé M5x12	Bundbolzen M5x12	Buló n con Brida M5x12
4	026.09.015.80.00	1		Asta comando valvola	Valve control rod	Tige de commande soupape	Ventilsteuerungsstab	Varilla mando válvula
5	026.09.017.00.00	1		Guida molla	Spring guide	Guide ressort	Federfuehrung	Guia de resorte
6	026.09.018.00.00	1	250cc 250RACING	Molla	Spring	Ressort	Feder	Muelle
7	026.09.021.00.00	1	250cc 250RACING	Molla regolazione	Adjusting spring	Ressort de réglage	Feder, Einstell	Muelle de regul.
7	026.09.022.00.00	1	300cc 300RACING	Molla regolazione	Adjusting spring	Ressort de réglage	Feder, Einstell	Muelle de regul.
8	C19.04.001.00.00	2		Rondella 16.10.1	Washer 16.10.1	Rondelle 16.10.1	U.Scheibe 16.10.1	Arandela 16.10.1
9	11.22100.000	2		Boccola a rulli 10x14x10	Roller bearing 10x14x10	Douille à roulements 10x14x10	Rollenbuchse 10x14x10	Caja de grasa de rodillos 10x14x10
10	026.09.011.00.00	1		Leva controllo	Control Lever	Levier De Commande	Steuerhebel	Palanca Control
11	006.09.000.00.00	1		Girante pompa	Rotor	Roue de pompe	Wasserpumpenrad	Rotor de la bomba
12	006.09.012.00.00	1		Rondella	Washer	Rondelle	U.Scheibe	Arandela
13	026.09.031.00.00	2		Perno valvola di scarico	Exhaust valve pin	Pivot soupape d'échapp.	Stift Auslassventil	Perno válvula de descarga
14	026.09.040.00.00	1		Valvola BOOSTER Sx	BOOSTER valve L.H.	Soupape BOOSTER G.	Auslass BOOSTER L.	Válvula BOOSTER izq.
15	026.09.005.80.00	1		Unità centrifuga	Centrifugal unit	Unité centrifuge	Zentrifugaleinheit	Unidad centrí fuga
16	16.11512.000	1		Gabbia assiale a rullini	Axial needle collar	Cage à aiguilles axiale	Axial-Nadelkranz	Jaula de agujas del cojinete
17	27.56400.000	1		Ralla	Washer	Rondelle	Scheibe	Arandela
18	026.09.003.00.00	1		Distanziale	Spacer	Entretoise	Distanzstück	Distanciador
19	28.22760.000	1		Seeger A12	Circlip A12	Circlip A12	Seeger A12	Seeger A12
20	026.09.018.00.00	1	300cc 300RACING	Molla ausiliaria	Auxiliary spring	Ressort auxiliaire	Hilfsfeder	Muelle auxiliar
21	31.30015.000	1		Vite a brugola 5x20	Allen screw 5x20	Vis à 6 pans 5x20	Sechskantschraube 5x20	Tornillo a llave allen 5x20
22	27.36500.000	1		Rondella Ø5	Washer Ø5	Rondelle Ø5	U.Scheibe Ø5	Arandela Ø5
23	026.09.042.85.00	1		Leva comando	Operating lever	Levier commande	Betaetigungshebel	Palanca de mando
24	026.09.046.00.00	1		Molla	Spring	Ressort	Feder	Muelle
25	026.09.044.00.00	1		Distanziale	Spacer	Entretoise	Distanzstück	Distanciador
26	026.09.043.85.00	1		Leva fine corsa	Travel limit lever	Levier fin de course	Endanschlaghebel	Palanca final de carrera
27	026.09.047.00.00	1		Distanziale	Spacer	Entretoise	Distanzstück	Distanciador
28	12.93410.000	4		Cuscinetto	Bearing	Roulement	Lager	Cojinete
29	026.09.041.00.00	1		Valvola BOOSTER Dx	BOOSTER valve R.H.	Soupape BOOSTER D.	Auslass BOOSTER R.	Válvula BOOSTER der.
30	026.09.050.00.00	1	250cc 250RACING	Valvola di scarico	Exhaust valve	Soupape d'échapp.	Auslassventil	Válvula de descarga
30	026.09.049.00.00	1	300cc 300RACING	Valvola di scarico	Exhaust valve	Soupape d'échapp.	Auslassventil	Válvula de descarga
31	C21.31.001.00.00	2		Molla sicurezza	Locking spring	Ressort surete	Sicherungsfeder	Resorte de seguridad
32	12.93387.000	1		Cuscinetto 6.19.6	Bearing 6.19.6	Roulement 6.19.6	Lager 6.19.6	Cojinete 6.19.6
33	C06.01.001.00.00	1		Cuscinetto 15.32.9 6002-2RSH C3	Bearing 15.32.9 6002-2RSH C3	Roulement 15.32.9 6002-2RSH C3	Lager 15.32.9 6002-2RSH C3	Cojinete 15.32.9 6002-2RSH C3
34	10.43720.000	1		Anello paraolio 8.24.7	Oil seal 8.24.7	Joint d'étanchéité 8.24.7	Ölschutzring 8.24.7	Retén de aceite 8.24.7
35	026.09.019.00.00	1	300cc 300RACING	Molla regolazione	Adjustment spring	Ressort de réglage	Einstellfeder	Muelle de ajuste

Tav.10

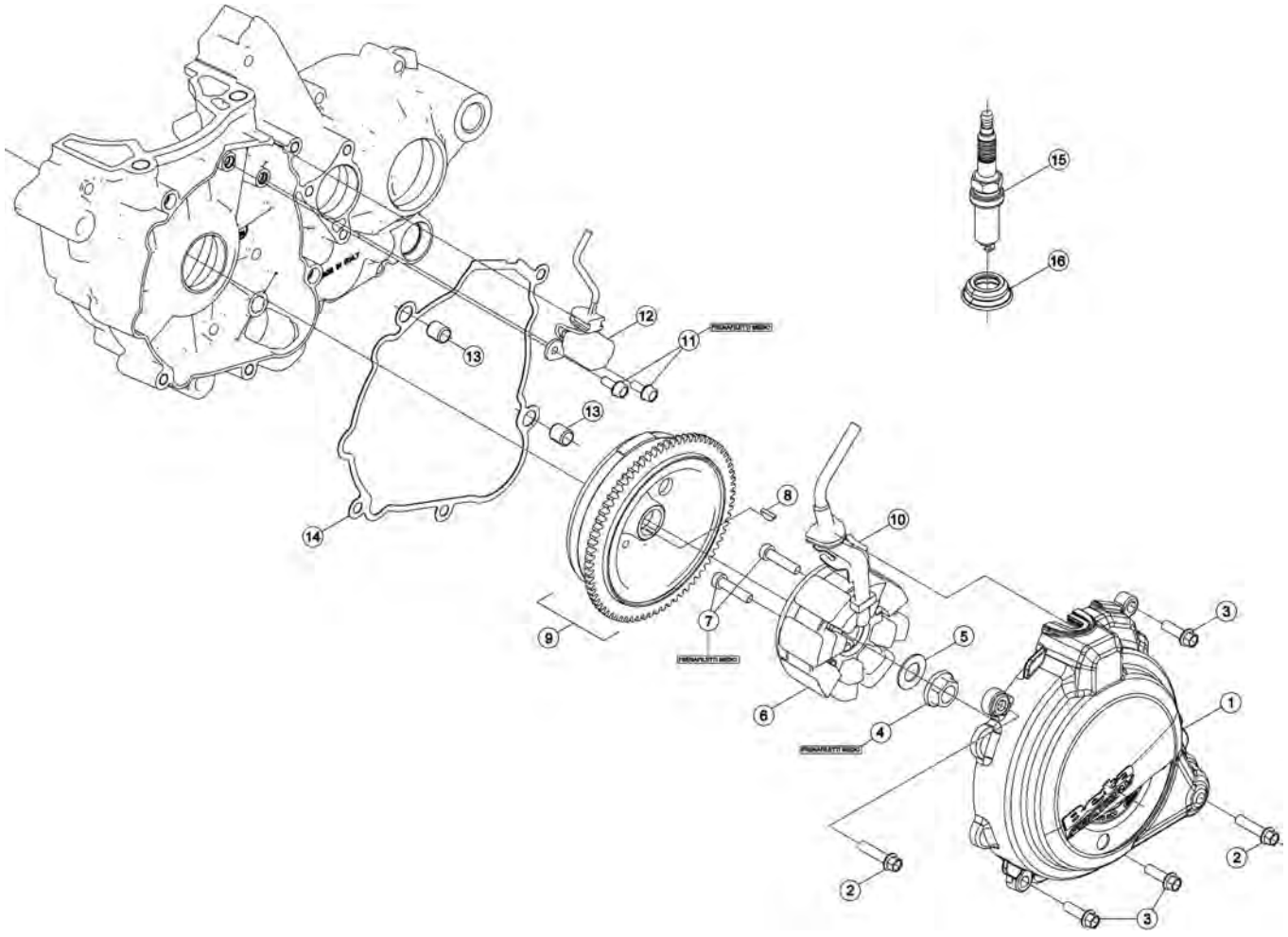

Tav.10

Pos Loc Pos Ps Pos	Numero Number Numéro Número Nummer	Q.tà Q.ty Q.té M.ge C.ad	Nota Note Note Nota Anm.	Descrizione	Description	Désignation	Beschreibung	Descripciòn
1	026.01.051.80.52	1		Coperchio volano	Flywheel cover	Carter volant	Schwungraddeckel	Tapa volante
2	11.50010.000	2		Bullone M6x25	Bolt M6x25	Boulon M6x25	Bolzen M6x25	Tornillo M6x25
3	11.49070.000	3		Bullone 6x20 ch rs	Bolt 6x20 ch rs	Boulon 6x20 ch rs	Bolzen 6x20 ch rs	Tornillo 6x20 ch rs
4	13.25010.000	1		Dado M12x1	Nut M12x1	Ecrou M12x1	Mutter M12x1	Tuerca M12x1
5	27.74810.000	1		Rondella elastica	Spring Washer	Rondelle élastique	Federring	Arandela elástica
6	006.10.020.00.00	1		Statore	Backplate	Stator	Ankerplatte	Estator
7	31.48507.000	2		Vite tcce testa ribassata M6x25	Screw tcce, shallow head M6x25	Vis tcce à tête basse M6x25	Schraube tcce senkkopf M6x25	Tornillo tcce de cabeza rebajada M6x25
8	12.46020.000	1		Chiavetta 3x5	Key 3x5	Clavette 3x5	Keil 3x5	Chaveta 3x5
9	026.10.001.85.00	1		Rotore volano	Flywheel rotor	Rotor volant	Rotor schwungrad	Rotor volante
10	006.01.054.00.00	1		Piastrina	Plate	Plaquette	Plättchen	Placa
11	11.46251.000	2		Bullone flangiato M5x12	Head Flanged bolt M5x12	Boulon Bridé M5x12	Bundbolzen M5x12	Buló n con Brida M5x12
12	026.10.003.00.00	1		Pick up	Pick-up	Capteur	Pick-up	Pick-up
13	16.36500.000	2		Grano 9x7,2x10	Dowel 9x7,2x10	Goujon 9x7,2x10	Stift 9x7,2x10	Clavija 9x7,2x10
14	026.01.053.00.00	1		Guarnizione coperchio volano	Alternator cover gasket	Garniture couvercle alternateur	Alternatordeckeldichtung	Junta tapa alternador
15	12.25123.000	1	250cc 250RACING	Candela	Spark.plug	Bougie	Zundkerze	Bujia
15	12.25220.000	1	300cc 300RACING	Candela	Spark.plug	Bougie	Zundkerze	Bujia
16	026.10.012.00.00	1		Guarnizione candela	Spark plug gasket	Joint bougie		Junta bujia

Tav.11

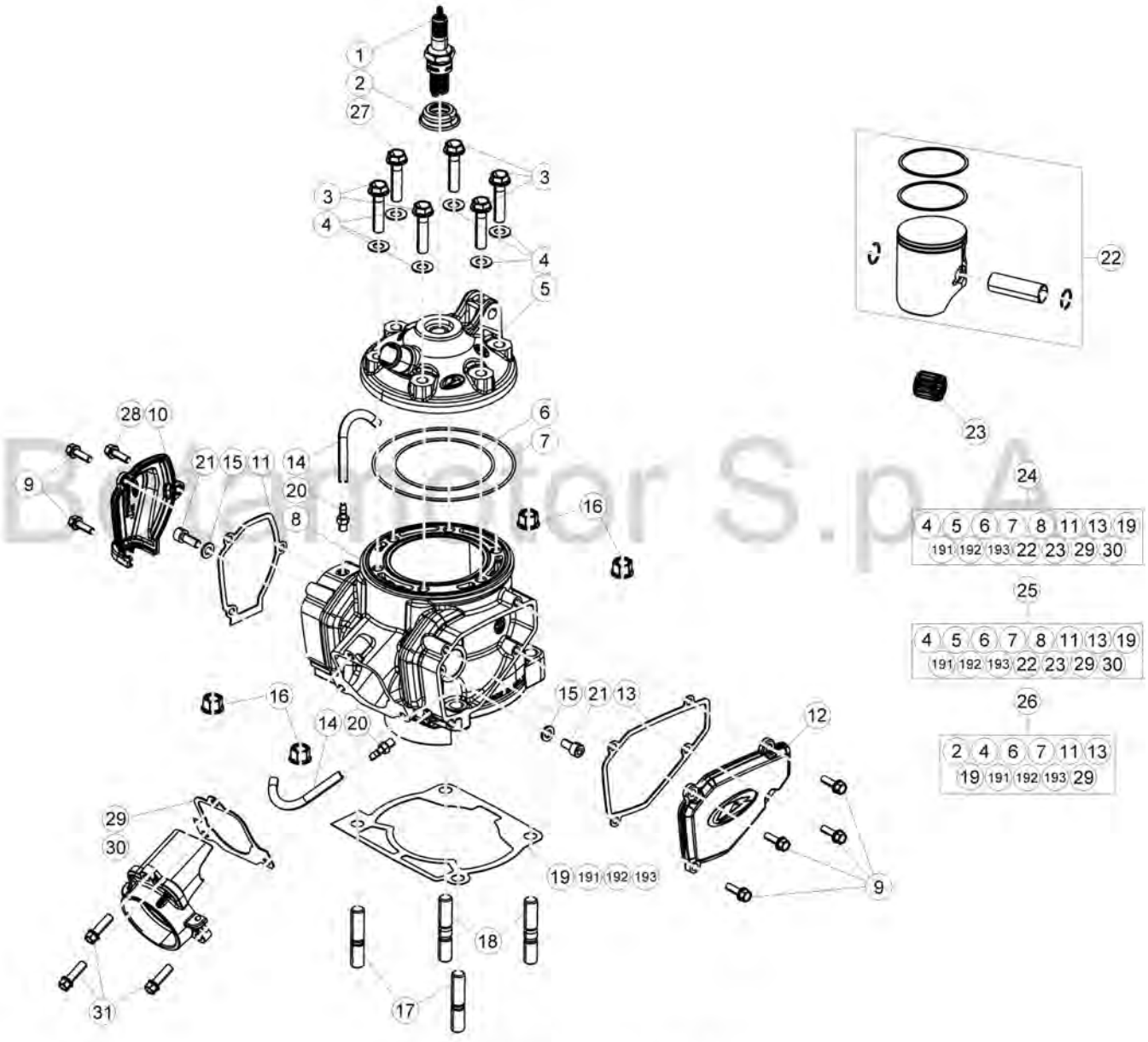

© Copyright 2017 Betamotor S.p.A.

Tav.11

Pos Loc Pos Ps Pos	Numero Number Numéro Número Nummer	Q.tà Q.ty Q.té M.ge C.ad	Nota Note Note Nota Anm.	Descrizione	Description	Désignation	Beschreibung	Descripciòn
1	12.25123.000	1	250cc 250RACING	Candela	Spark.plug	Bougie	Zündkerze	Bujia
1	12.25220.000	1	300cc 300RACING	Candela	Spark.plug	Bougie	Zündkerze	Bujia
2	026.10.012.00.00	1		Guarnizione candela	Spark plug gasket	Joint bougie	Zündkerzendichtring	Junta bujia
3	026.11.011.00.00	5		Vite flangiata M8x35	Flange bolt M8x35	Boulon de bride M8x35	Flanschenschraube M8x35	Perno de reborde M8x35
4	026.11.010.00.00	6		Rosetta 8.16.1	Washer 8.16.1	Rondelle 8.16.1	Federring 8.16.1	Arandela 8.16.1
5	026.11.106.80.52	1	250cc 250RACING	Testa completa	Cylinder head	Culasse complete	Zylinderkopf Kpl.	Culata completa
5	026.11.018.80.52	1	300cc 300RACING	Testa completa	Cylinder head	Culasse complete	Zylinderkopf Kpl.	Culata completa
6	10.66972.000	1	250cc 250RACING	Anello OR 73.2	O-Ring 73.2	Bague d'étanchéité 73.2	O-Ring 73.2	Anillo OR 73.2
6	10.66973.000	1	300cc 300RACING	Anello OR 78.2	O-Ring 78.2	Bague d'étanchéité 78.2	O-Ring 78.2	Anillo OR 78.2
7	10.66978.000	1		Anello OR 105.2	O-Ring 105.2	Bague d'étanchéité 105.2	O-Ring 105.2	Anillo OR 105.2
8	026.11.029.00.0A	1	250cc 250RACING	Cilindro	Cylinder	Cylindre	Zylinder	Cilindro
8	026.11.029.00.0B	1	250cc 250RACING	Cilindro	Cylinder	Cylindre	Zylinder	Cilindro
8	026.11.030.00.0A	1	300cc 300RACING	Cilindro	Cylinder	Cylindre	Zylinder	Cilindro
8	026.11.030.00.0B	1	300cc 300RACING	Cilindro	Cylinder	Cylindre	Zylinder	Cilindro
9	11.46360.000	6		Bullone flangiato M5x16	Head Flanged bolt M5x16	Boulon Bridé M5x16	Bundbolzen M5x16	Buló n con Brida M5x16
10	026.11.002.20.00	1		Coperchio valvola Dx.	Right valve head cover	Couvercle soupape D.	Ventilabdeckung rechts	Tapa válvula der.
11	026.11.003.00.00	1		Guarnizione coperchio valvola dx.	Right valve cover gasket	Garniture couvercle soupape D.	Ventildeckeldichtung rechts	Junta tapa válvula der.
12	026.11.004.00.52	1		Coperchio valvola Sx.	Left valve head cover	Couvercle soupape G.	Ventilabdeckung links	Tapa válvula izq.
13	026.11.005.00.00	1		Guarnizione coperchio valvola sx.	Left valve cover gasket	Garniture couvercle soupape G.	Ventildeckeldichtung links	Junta tapa válvula izq.
14	026.11.012.00.00	2		Tubo benzina	Petrol tube	Tuyau d'essence	Benzinschlauch	Tubo gasolina
15	27.40500.000	2		Rondella 6x13	Washer 6x13	Rondelle 6x13	U.Scheibe 6x13	Arandela 6x13
16	13.20210.000	4		Dado speciale M10x1,25 ch 13	Special nut M10x1,25 ch 13	Ecrou spéciale M10x1,25 ch 13	Spezialmutter M10x1,25 ch 13	Tuerca especial M10x1,25 ch 13
17	C24.76.001.00.00	2		Prigioniero M10x30x1,25	Stud M10x30x1,25	Goujon M10x30x1,25	Stiftschraube M10x30x1,25	Espárrago M10x30x1,25
18	C24.76.002.00.00	2		Prigioniero M10x35x1,25	Stud M10x35x1,25	Goujon M10x35x1,25	Stiftschraube M10x35x1,25	Espárrago M10x35x1,25
19	026.11.025.00.00	1		Guarnizione base cilindro Sp. 0,3	Cylinder base gasket Sp. 0,3	Garniture base cylindre Sp. 0,3	Dichtung für Zylinderfuß Sp. 0,3	Junta base cilindro Sp. 0,3
191	026.11.026.00.00	1		Guarnizione base cilindro Sp. 0,4	Cylinder base gasket Sp. 0,4	Garniture base cylindre Sp. 0,4	Dichtung für Zylinderfuß Sp. 0,4	Junta base cilindro Sp. 0,4
192	026.11.027.00.00	1		Guarnizione base cilindro Sp. 0,5	Cylinder base gasket Sp. 0,5	Garniture base cylindre Sp. 0,5	Dichtung für Zylinderfuß Sp. 0,5	Junta base cilindro Sp. 0,5
193	026.11.028.00.00	1		Guarnizione base cilindro Sp. 0,6	Cylinder base gasket Sp. 0,6	Garniture base cylindre Sp. 0,6	Dichtung für Zylinderfuß Sp. 0,6	Junta base cilindro Sp. 0,6
20	29.00280.000	2		Tappo presa dep.	Air Vent Plug	Bouchon prise dep.	Verschluss f. Lufteinlass	Tapón Toma Aire dep.
21	31.31050.000	2		Vite t.c.c.e.M6x15	Screw t.c.c.e.M6x15	Vis t.c.c.e.M6x15	Schraube t.c.c.e.M6x15	Tornillo t.c.c.e.M6x15
22	026.02.026.80.0A	1	250cc 250RACING	Pistone completo - Sel. A	Piston set - Sel. A	Piston compl. - Sél. A	Kolben, kompl. - Auswahl A	Pistón, compl. - Sel. A
22	026.02.026.80.0B	1	250cc 250RACING	Pistone completo - Sel. B	Piston set - Sel. B	Piston compl. - Sél. B	Kolben, kompl. - Auswahl B	Pistón, compl. - Sel. B
22	026.02.026.80.0C	1	250cc 250RACING	Pistone completo - Sel. C	Piston set - Sel. C	Piston compl. - Sél. C	Kolben, kompl. - Auswahl C	Pistón, compl. - Sel. C
22	026.02.033.80.0A	1	300cc 300RACING	Pistone completo - Sel. A	Piston set - Sel. A	Piston compl. - Sél. A	Kolben, kompl. - Auswahl A	Pistón, compl. - Sel. A
22	026.02.033.80.0B	1	300cc 300RACING	Pistone completo - Sel. B	Piston set - Sel. B	Piston compl. - Sél. B	Kolben, kompl. - Auswahl B	Pistón, compl. - Sel. B
22	026.02.033.80.0C	1	300cc 300RACING	Pistone completo - Sel. C	Piston set - Sel. C	Piston compl. - Sél. C	Kolben, kompl. - Auswahl C	Pistón, compl. - Sel. C
23	16.16710.000	1		Gabbia	Cage	Cage	Lagerkäfig	Jaula
24	026.11.041.82.0A	1	250cc 250RACING	Cilindro - Sel. A	Cylinder - Sel. A	Cylindre - Sél. A	Zylinder - Auswahl A	Cilindro - Sel. A
24	026.11.041.82.0B	1	250cc 250RACING	Cilindro - Sel. B	Cylinder - Sel. B	Cylindre - Sél. B	Zylinder - Auswahl B	Cilindro - Sel. B
25	026.11.042.82.0A	1	300cc 300RACING	Cilindro - Sel. A	Cylinder - Sel. A	Cylindre - Sél. A	Zylinder - Auswahl A	Cilindro - Sel. A
25	026.11.042.82.0B	1	300cc 300RACING	Cilindro - Sel. B	Cylinder - Sel. B	Cylindre - Sél. B	Zylinder - Auswahl B	Cilindro - Sel. B
26	026.11.040.82.00	1		Kit guarnizioni	Gasket set	Jeu joints	Dichtungsatz	Juego juntas
27	026.11.037.00.00	1		Vite di sicurezza	Tab screw	Vis de sûreté	Sicherungs-Schraube	Tornillo de seguridad
28	026.11.036.00.00	1		Vite di sicurezza	Tab screw	Vis de sûreté	Sicherungs-Schraube	Tornillo de seguridad
29	026.11.038.00.00	1		Guarnizione flangia	Flange gasket	Garniture bride	Dichtung Flansch	Junta para brida
30	026.11.032.00.00	1		Flangia scarico	Flange exhaust	Bride échappement	Auslassflansch	Brida de escape
31	11.49070.000	3		Vite TE M6x20	Screw TE M6x20	Vis TE M6x20	Schraube TE M6x20	Tornillo TE M6x20

Tav.12

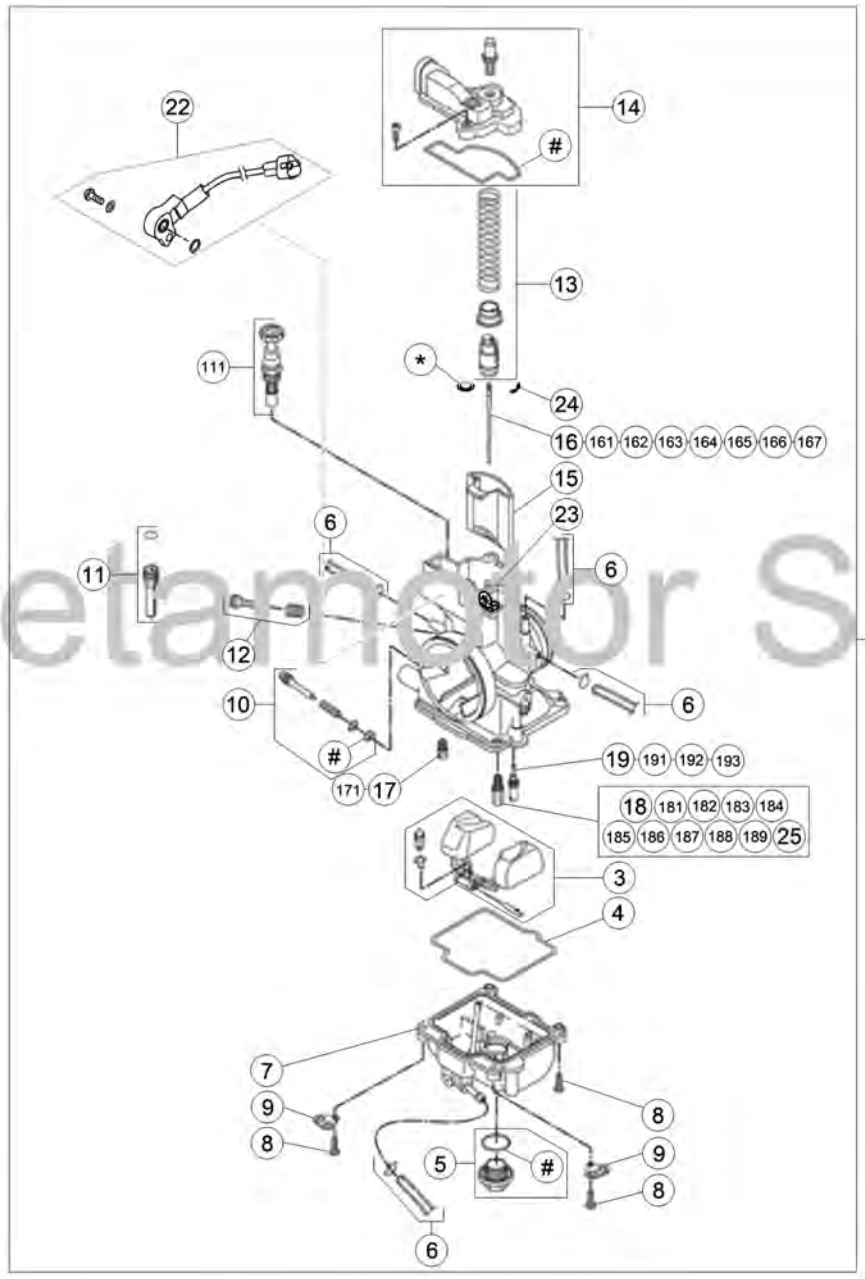

Particolari non figuranti
(2)

Betamotor S.p.A.

© Copyright 2017 Betamotor S.p.A.

Tav.12

Pos Loc Pos Ps Pos	Numero Number Numéro Número Nummer	Q.tà Q.ty Q.té M.ge C.ad	Nota Note Note Nota Anm.	Descrizione	Description	Désignation	Beschreibung	Descripciòn
1	026.12.049.82.00	1	250cc 250RACING	Carburatore	Carburettor	Carburateur	Vergaser	Carburador
1	026.12.059.82.00	1	300cc 300RACING	Carburatore	Carburettor	Carburateur	Vergaser	Carburador
2	026.12.058.82.00	1	EU250cc EU250RACING	Carburatore	Carburettor	Carburateur	Vergaser	Carburador
2	026.12.057.82.00	1	EU300cc EU300RACING	Carburatore	Carburettor	Carburateur	Vergaser	Carburador
3	026.12.009.80.00	1		Galleggiante	Float	Flotteur	Schwimmer	Flotador
4	026.12.011.00.00	1		Guarnizione vaschetta	Float chamber gasket	Joint vase essence	Dichtung Schwimmergehäuse	Junta cuba
5	026.12.106.80.00	1		Tappo vaschetta carburatore	Cap drain	Bouchon	Verschluss	Tapón
6	026.12.045.00.00	1		Kit tubi sfiato	Breather pipes kit	Kit tuyaux reniflard	Kit Entlüftungsleitungen	Kit tubos respiraderos
7	026.12.107.00.00	1		Vaschetta completa	Chamber assy.	Cuvette compl.	Becken kpl	Cubeta compl.
8	026.12.016.00.00	3		Vite M4x16	Screw M4x16	Vis M4x16	Schraube M4x16	Tornillo M4x16
9	026.12.024.00.00	2		Piastrina	Plate	Plaquette	Plättchen	Placa
10	026.12.028.80.00	1		Vite di regolazione	Adjusting screw	Vis de réglage	Schraube, Einstell	Tornillo de regul.
11	026.12.006.80.00	1		Distanziale	Spacer	Entretoise	Distanzstück	Distanciador
111	026.12.008.00.00	1		Pistone starter	Starter piston	Piston starter	Kolben starter	Pistón starter
12	026.12.032.80.00	1		Vite di regolazione	Adjusting screw	Vis de réglage	Schraube, Einstell	Tornillo de regul.
13	026.12.037.80.00	1		Molla valvola	Valve spring	Ressort soupape	Ventilfeder	Muelle válvula
14	026.12.060.00.00	1		Coperchio carburatore	Carburettor cover	Couvercle carburateur	Abdeckung Vergaser	Tapa carburador
15	026.12.105.00.00	1		Valvola Carburatore	Carb Valve	Soupape Carburateur	Vergaserventil	Válvula Carb.
16	026.12.019.00.00	1		Spillo N2ZJ	Needle N2ZJ	Pointeau N2ZJ	Düsennadel N2ZJ	Aguja N2ZJ
161	026.12.018.00.00	1	300cc 300RACING	Spillo N2ZW	Needle N2ZW	Pointeau N2ZW	Düsennadel N2ZW	Aguja N2ZW
162	026.12.020.00.00	1		Spillo N2ZK	Needle N2ZK	Pointeau N2ZK	Düsennadel N2ZK	Aguja N2ZK
163	026.12.017.00.00	1		Spillo N84K	Needle N84K	Pointeau N84K	Düsennadel N84K	Aguja N84K
164	026.12.021.00.00	1		Spillo N2ZH	Needle N2ZH	Pointeau N2ZH	Düsennadel N2ZH	Aguja N2ZH
165	026.12.022.00.00	1		Spillo NOZK	Needle NOZK	Pointeau NOZK	Düsennadel NOZK	Aguja NOZK
166	026.12.023.00.00	1	EU EU250RACING	Spillo NOZJ	Needle NOZJ	Pointeau NOZJ	Düsennadel NOZJ	Aguja NOZJ
167	026.12.050.00.00	1	250cc EU250RACING	Spillo NOZI	Needle NOZI	Pointeau NOZI	Düsennadel NOZI	Aguja NOZI
17	026.12.046.00.00	1	EU EU RACING	Getto starter 85	Starter jet 85	Gicleur starter 85	Starterdüse 85	Surtidor starter 85
171	026.12.005.00.00	1		Getto starter 50	Starter jet 50	Gicleur starter 50	Starterdüse 50	Surtidor starter 50
18	16.42304.000	1		Getto massimo 118	Main jet 118	Gicleur maxi 118	Hauptdüse 118	Surtidor máximo 118
181	36.25104.000	1		Getto massimo 155	Main jet 155	Gicleur maxi 155	Hauptdüse 155	Surtidor máximo 155
182	36.25105.000	1		Getto massimo 158	Main jet 158	Gicleur maxi 158	Hauptdüse 158	Surtidor máximo 158
183	36.25106.000	1		Getto massimo 160	Main jet 160	Gicleur maxi 160	Hauptdüse 160	Surtidor máximo 160
184	36.25107.000	1		Getto massimo 162	Main jet 162	Gicleur maxi 162	Hauptdüse 162	Surtidor máximo 162
185	36.25108.000	1	EU EU RACING	Getto massimo 165	Main jet 165	Gicleur maxi 165	Hauptdüse 165	Surtidor máximo 165
186	36.25109.000	1	250cc EU250RACING	Getto massimo 168	Main jet 168	Gicleur maxi 168	Hauptdüse 168	Surtidor máximo 168
187	36.25110.000	1		Getto massimo 170	Main jet 170	Gicleur maxi 170	Hauptdüse 170	Surtidor máximo 170
188	36.25111.000	1		Getto massimo 172	Main jet 172	Gicleur maxi 172	Hauptdüse 172	Surtidor máximo 172
189	36.25112.000	1		Getto massimo 175	Main jet 175	Gicleur maxi 175	Hauptdüse 175	Surtidor máximo 175
19	16.42357.000	1		Getto minimo 35	Starter jet 35	Gicleur starter 35	Starterdüse 35	Surtidor starter 35
191	16.42355.000	1	250-300cc 250RACING 300RACING	Getto minimo 38	Starter jet 38	Gicleur starter 38	Starterdüse 38	Surtidor starter 38
192	026.12.007.00.00	1		Getto minimo 40	Starter jet 40	Gicleur starter 40	Starterdüse 40	Surtidor starter 40
193	16.42347.000	1		Getto minimo 42	Starter jet 42	Gicleur starter 42	Starterdüse 42	Surtidor starter 42
20	026.12.044.00.00	1		Kit guarnizioni	Packings kit	Jeu joints	Dichtungenssatz	Grupo juntas
22	036.12.004.00.00	1		Sensore posizione valvola a farfalla	Throttle Position Sensor	Sensor Position Valve	Sensor Gasschieberposition	Sensor Valvula
23	25.57912.000	1		Piastrina fissaggio molla collettore	Retaining plate, manifold spring	Plaque de fixation ressort de coll.	Befestigungsplatte krümmerfeder	Pastilla de fijación del muelle colector
24	12.54242.000	1		Clip carburatore	Carburetor clip	Carburateur clip	Clip Vergaser	Clip carburador
25	16.42311.000	1		Getto massimo 118	Main jet 118	Gicleur maxi 118	Hauptdüse 118	Surtidor máximo 118

Tav.14

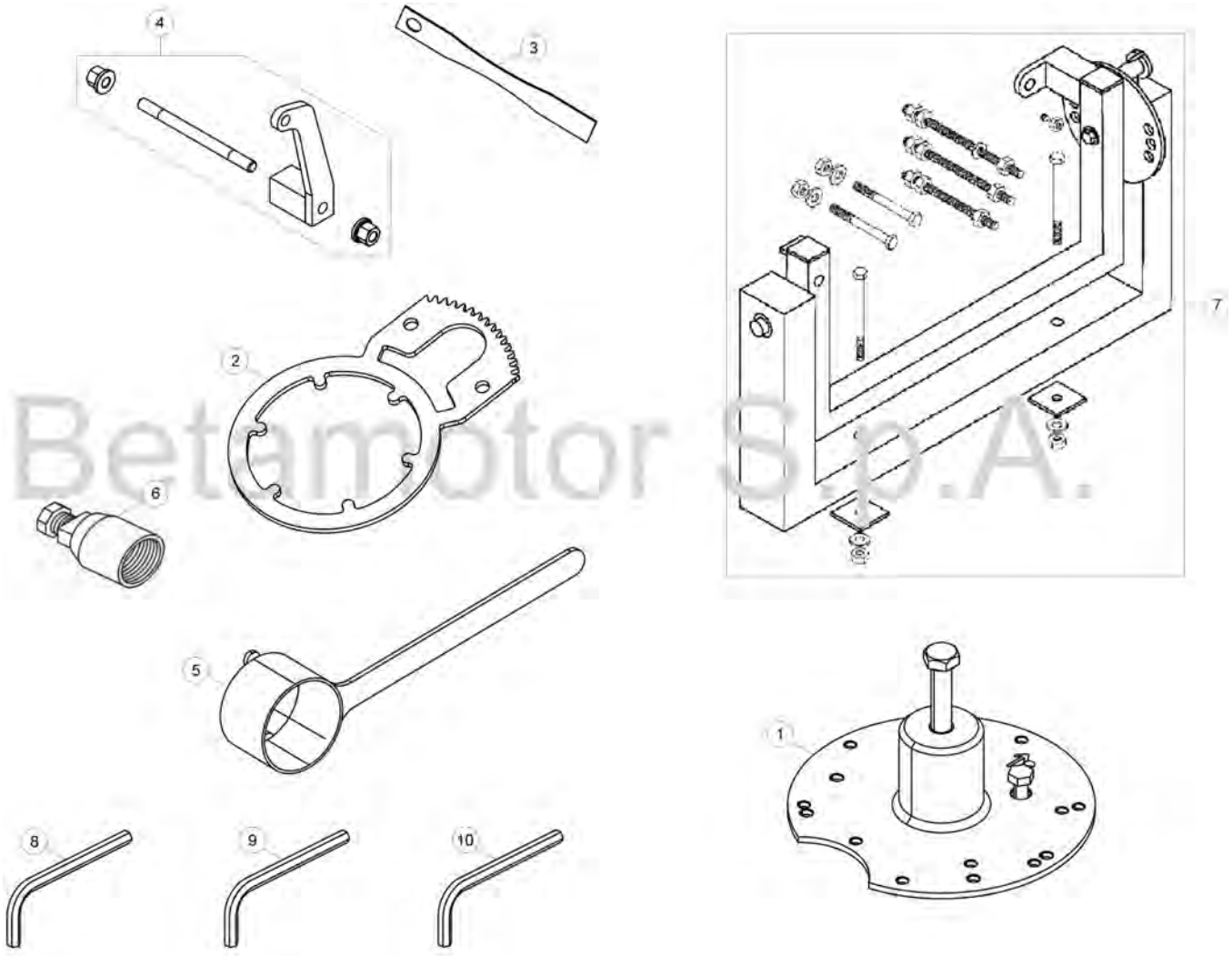

Betamotor S.p.A.

© Copyright 2017 Betamotor S.p.A.

Tav.14

Pos Loc Pos Ps Pos	Numero Number Numéro Número Nummer	Q.tà Q.ty Q.té M.ge C.ad	Nota Note Note Nota Anm.	Descrizione	Description	Désignation	Beschreibung	Descripciòn
1	007.14.010.80.00	1		Disaccoppiatore carter	Crankcase splitter	Séparateur de carter	Entkoppler gehäuse	Desacoplador del cárter
2	029.14.002.50.00	1		Chiave speciale	Special wrench	Clé speciale	Spezialschlüssel	Llave special
3	026.14.010.00.00	1		Strumento misura squish	Squish measuring tool	Outil de mesure du squish	Werkzeug für Quetschkante ausmessen	Herramienta para medir el squish
4	026.14.003.00.00	1		Staffa supporto motore	Engine support bracket	Bride support moteur	Motorsattelbefestigung	Brida soporte motor
5	026.14.005.50.00	1		Attrezzo bloccaggio volano	Holding Tool, Flywheel	Clé de fixation volant	Halteschlüssel für Schwungrad	Llave para sostener el volante
6	36.25173.000	1		Estrattore volano	Flywheel extractor	Extracteur pour volant	Auszieher für Schwungrad	Extractor volante
7	36.25132.000	1		Attrezzatura Mont. Motore	Mounting Rack	Outils Montage Moteur	Montagebock	Aparejos Montaje Motor
8	026.44.029.00.00	1		Chiave speciale	Special wrench	Clé speciale	Spezialschlüssel	Llave special
9	026.44.028.00.00	1		Chiave speciale	Special wrench	Clé speciale	Spezialschlüssel	Llave special
10	007.44.035.00.00	1		Chiave speciale	Special wrench	Clé speciale	Spezialschlüssel	Llave special

Tav.31

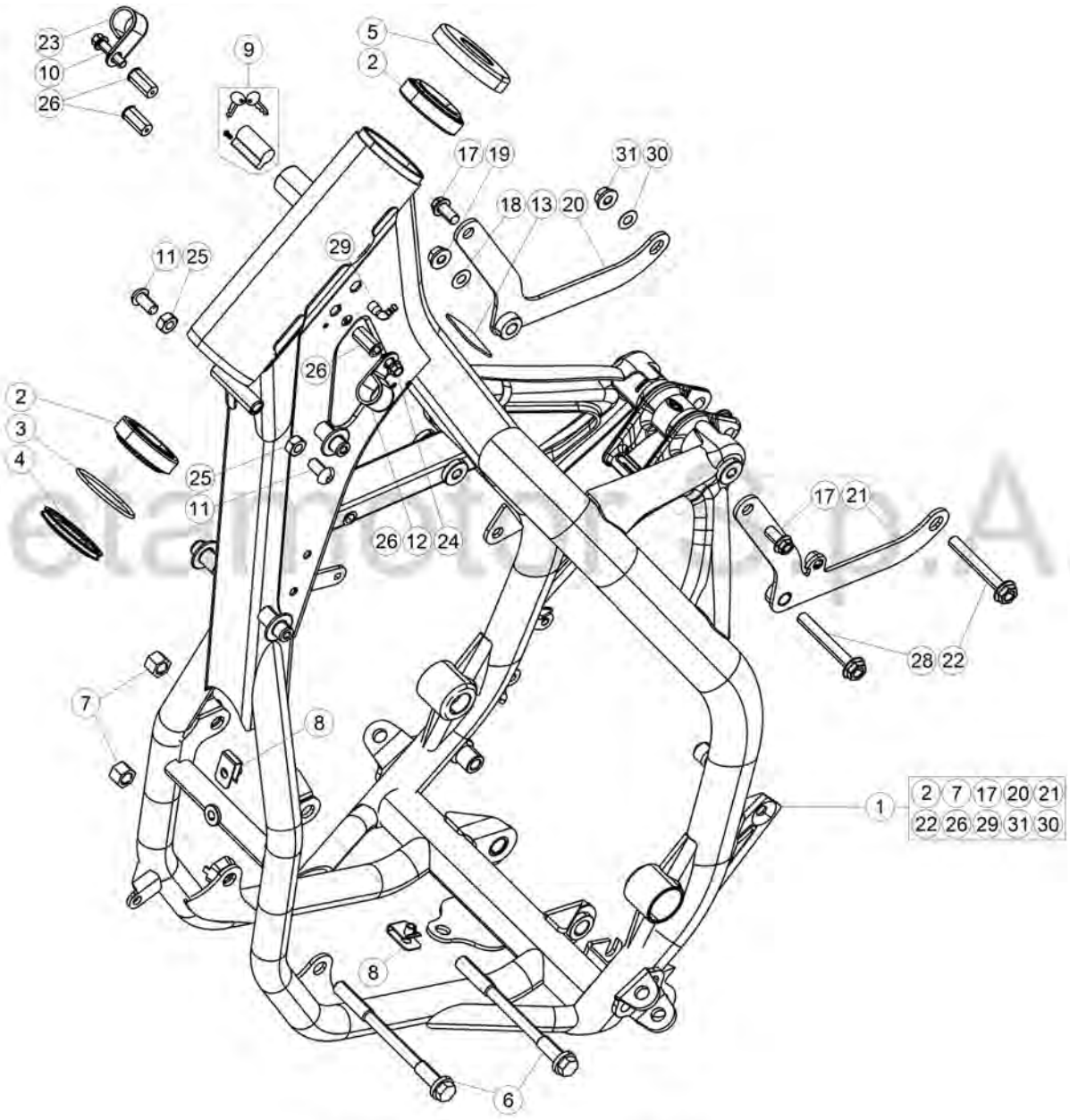

© Copyright 2018 Betamotor S.p.A.

Tav.31

Pos Loc Pos Ps Pos	Numero Number Numéro Número Nummer	Q.tà Q.ty Q.té M.ge C.ad	Nota Note Note Nota Anm.	Descrizione	Description	Désignation	Beschreibung	Descripciòn
1	026.31.082.80.50	1		Telaio completo	Frame, assy	Chassis complet	Rahmen, kpl	Bastidor compl.
2	12.99510.000	2		Cuscinetto conico 29x50x15	Conical bearing 29x50x15	Roulement conique 29x50x15	Lager 29x50x15	Cojinete conico 29x50x15
3	10.66935.000	1		Anello OR	O-Ring	Bague d'étanchéité	O-Ring	Anillo OR
4	020.31.039.00.00	1		Anello parapolvere	Dust cover	Disque pare-poussière	Staubdeckel	Disco gurdapolvo
5	031.31.016.22.00	1		Protezione cuscinetto sterzo	End Cap Bearing	Palier De Bielle	Lagerdeckel	Tapa Rodamiento
6	11.64607.000	2		Perno motore	Engine pin	Axe moteur	Motorbolzen	Perno motor
7	13.21060.000	2		Dado M10X1,25	Nut M10x1,25	Ecrou M10x1,25	Mutter M10x1,25	Tuerca M10x1,25
8	25.60311.000	2		Piastrina elastica M6	Spring plate M6	Plaquette élastique M6	Plättchen M6	Pletina elástica M6
9	28.85861.000	1		Serratura bloccasterzo	Security lock	Serrure blocage guidon	Lenkradschloss	Cerradura bloque manillar
10	11.50010.000	1		Bullone M6x25	Bolt M6x25	Boulon M6x25	Bolzen M6x25	Tornillo M6x25
11	31.64060.000	2		Vite TBCE M8X16	Screw TBCE M8X16	Vis TBCE M8X16	Schraube TBCE M8X16	Tornillo TBCE M8X16
12	C07.19.001.00.00	1		Fascetta a nastro con gomma	Band clamp with rubber	Collier de serrage avec caoutchouc	Bandklemme mit Gummi	Abrazadera con goma
13	031.31.035.00.00	1		Tampone anteriore serbatoio	Front buffer tank	Silentbloc AV. réservoir	Puffer tank	Silent-block del. deposito
17	11.54521.000	2		Bullone M8x16	Bolt M8x16	Boulon M8x16	Bolzen M8x16	Tornillo M8x16
18	27.49500.000	1		Rondella 8x18	Washer 8x18	Rondelle 8x18	U.Scheibe 8x18	Arandela 8x18
19	13.17123.000	2		Dado M8 flangiato	Nut M8	Ecrou M8	Mutter M8	Tuerca M8
20	026.31.079.80.00	1		Staffa attacco testa dx.	Head connection bracket R.H.	Bride attelage culasse D.	Befestigung Zylinderkopf R.	Brida anclaje culata der.
21	026.31.093.80.00	1		Attacco motore superiore sx.	Engine connection bracket upper L.H.	Bride attelage moteur sup. G.	Befestigung Motor oben L.	Brida anclaje motor sup. izq.
22	11.55900.000	1		Bullone 8.55 PF CH13 RS	Bolt 8.55 PF CH13 RS	Boulon 8.55 PF CH13 RS	Bolzen 8.55 PF CH13 RS	Tornillo 8.55 PF CH13 RS
23	15.14654.000	1		Fascetta passacavo gommato 14	Rubberized cable grommet 14	Passe-câbles caoutchouté 14	Gummierte Kabeldurchgang 14	Banda de goma 14
24	11.47015.000	1		Bullone M6x12	Bolt M6x12	Boulon M6x12	Bolzen M6x12	Tornillo M6x12
25	13.16000.000	2		Dado M8x6	Nut M8x6	Ecrou M8x6	Mutter M8x6	Tuerca M8x6
26	27.33741.000	4		Rivetto	Rivet	Rivet	Niete	Remache
28	11.55900.000	1		Bullone 8.55 PF CH13 RS	Bolt 8.55 PF CH13 RS	Boulon 8.55 PF CH13 RS	Bolzen 8.55 PF CH13 RS	Tornillo 8.55 PF CH13 RS
29	27.23473.000	1		Raccordo sfiato olio	Oil breather joint	Raccord reniflard huile	Entlüftungstutzen	Racor respiradero aceite
30	27.49500.000	1		Rondella	Washer	Rondelle	U.Scheibe	Arandela
31	13.17123.000	1		Dado M8 flangiato	Nut M8	Ecrou M8	Mutter M8	Tuerca M8

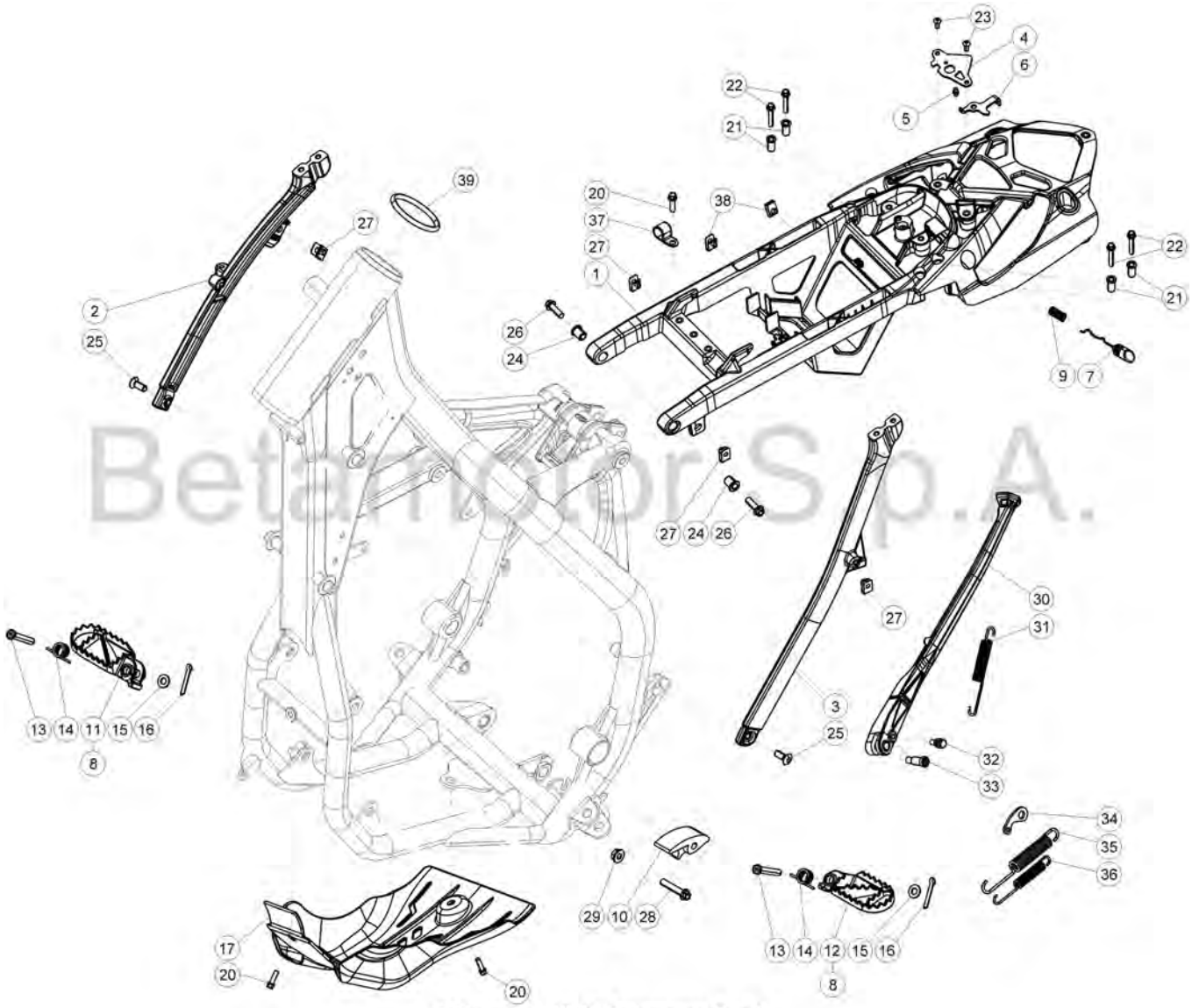

Betamotor S.p.A.

© Copyright 2017 Betamotor S.p.A.

Tav.32

Pos Loc Pos Ps Pos	Numero Number Numéro Número Nummer	Q.tà Q.ty Q.té M.ge C.ad	Nota Note Note Nota Anm.	Descrizione	Description	Dé signation	Beschreibung	Descripciò n
1	026.32.003.82.51	1		Telaietto posteriore	Rear frame	Châssis arrière	Hinterer kleiner Rahmen	Bastidor trasero
2	020.32.100.00.59	1		Braccetto destro	Right arm	Bras droit	Rechter Schutzblecharm	Brazo derecho
3	020.32.027.42.59	1		Attacco telaio posteriore sx	Rear LH frame fastening	Fixation châssis arrière gauche	Rahmen befestigung hinten links	Enganche bastidor trasero izq.
4	020.32.010.00.05	1		Piastra fissaggio serratura	Lock sec. Plate	Plaque fix. Serrure	Befestigungsplatte Schloß	Chapa fij. cerradura
5	020.32.112.00.00	1		Perno serratura	Pin	Pivot	Zapfen	Perno
6	020.32.011.00.05	1		Piasta ritegno serratura	Plate	Plaquette	Schild	Placa
7	020.32.013.80.51	1		Bottone	Knob	Bouton	Knopf	Boton
8	026.32.004.80.00	1	RACING	Coppia pedane	Foot peg couple	Couple repose-pieds	Pedalpaar	Par de estribos
9	020.32.016.00.00	1		Molla	Spring	Ressort	Feder	Muelle
10	25.25601.000	1		Pattino catena	Chain shoe	Doigt chaine	Gleitauflage	Patí n cadena
11	25.32521.000	1		Pedana dx.	Foot-peg R.H.	Repose-pieds d.	Fußblech rechts	Estribo der.
12	25.32531.000	1		Pedana sx.	Foot-peg L.H.	Repose-pieds g.	Fußblech links	Estribo izq.
13	25.54465.000	2		Perno pedana	Footrest pin	Pivot repose-pied	Rasten Pin	Eje estribera
14	016.32.020.00.00	2		Molla pedanina	Foot rest spring	Ressort repose-pied	Fußblechfeder	Muelle estribo
15	031.32.001.00.00	2		Rondella 10x21x2	Washer 10x21x2	Rondelle 10x21x2	U.Scheibe 10x21x2	Arandela 10x21x2
16	12.81993.000	2		Copiglia 3x20	Split pin 3x20	Goupille 3x20	Splint 3x20	Grupilla 3x20
17	036.32.002.00.00	1		Piastra sotto motore	Engine protection	Protection moteur	Motorschutz	Protecció n motor
20	11.49070.000	3		Bullone 6x20 ch rs	Bolt 6x20 ch rs	Boulon 6x20 ch rs	Bolzen 6x20 ch rs	Tornillo 6x20 ch rs
21	020.32.004.00.00	4		Boccola superiore	Upper bush	Douille supérieure	Obere Buchse	Casquillo superior
22	11.50355.000	4		Bullone M6x35	Bolt M6x35	Boulon M6x35	Bolzen M6x35	Tornillo M6x35
23	31.29810.000	2		Vite 5x12	Screw 5x12	Vis 5x12	Schraube 5x12	Tornillo 5x12
24	020.32.003.00.00	2		Boccola anteriore	Front bush	Douille avant	Vordere Buchse	Casquillo delantero
25	007.32.032.00.00	2		Vite speciale TSBEI CH6 M8x20 10.9 zinc	Special screw TSBEI CH6 M8x20 10.9 zinc	Vis spéciale TSBEI CH6 M8x20 10.9 zinc	Spezialschraube TSBEI CH6 M8x20 10.9 zinc	Tornillo especial TSBEI CH6 M8x20 10.9 zinc
26	31.64070.000	2		Vite flangiata 8x30	Flanged screw 8x30	Vis à brides 8x30	Flanschschraube 8x30	Tornillo rebordeado 8x30
27	25.60311.000	4		Piastrina elastica M6	Spring plate M6	Plaquette élastique M6	Plättchen M6	Pletina elástica M6
28	11.55480.000	1		Vite M8x40	Screw M8x40	Vis M8x40	Schraube M8x40	Tornillo M8x40
29	13.17020.000	1		Dado autoblocc. Basso M8	Nut M8	Ecrou M8	Mutter M8	Tuerca M8
30	031.32.070.00.00	1		Cavalletto	Central stand	Béquille	Kippständer	Caballete
31	020.32.026.00.00	1		Molla cavalletto	Central stand spring	Ressort béquille	Feder Kippständer	Muelle caballete
32	11.66615.000	1		Bullone spec. piastra cavalletto	Central stand special bolt	Boulon spec. plaque béq.	Spezialschraube Kippständerplatte	Tornillo especial chapa caballete
33	11.66614.000	1		Bullone spec. cavalletto	Special bolt	Boulon spec.	Spezialschraube	Tornillo especial
34	25.57636.000	1		Piastrina aggancio molla	Bracket spring	Plaquette accroch. ressort	Plättchen federanlenkung	Placa eng. muelle
35	22.48819.000	1		Molla esterna	Spring	Ressort	Feder	Muelle
36	22.48818.000	1		Molla interna	Spring	Ressort	Feder	Muelle
37	15.14654.000	1		Fascetta	Clamp	Collier	Schelle	Abrazadera
38	25.60311.000	2	250-300cc	Piastrina elastica M6	Spring plate M6	Plaquette élastique M6	Plättchen M6	Pletina elástica M6
39	031.32.007.00.00	1		Anello di tenuta	Oil seal	Joint d'étanchéité	Ölschutzring	Retén de aceite

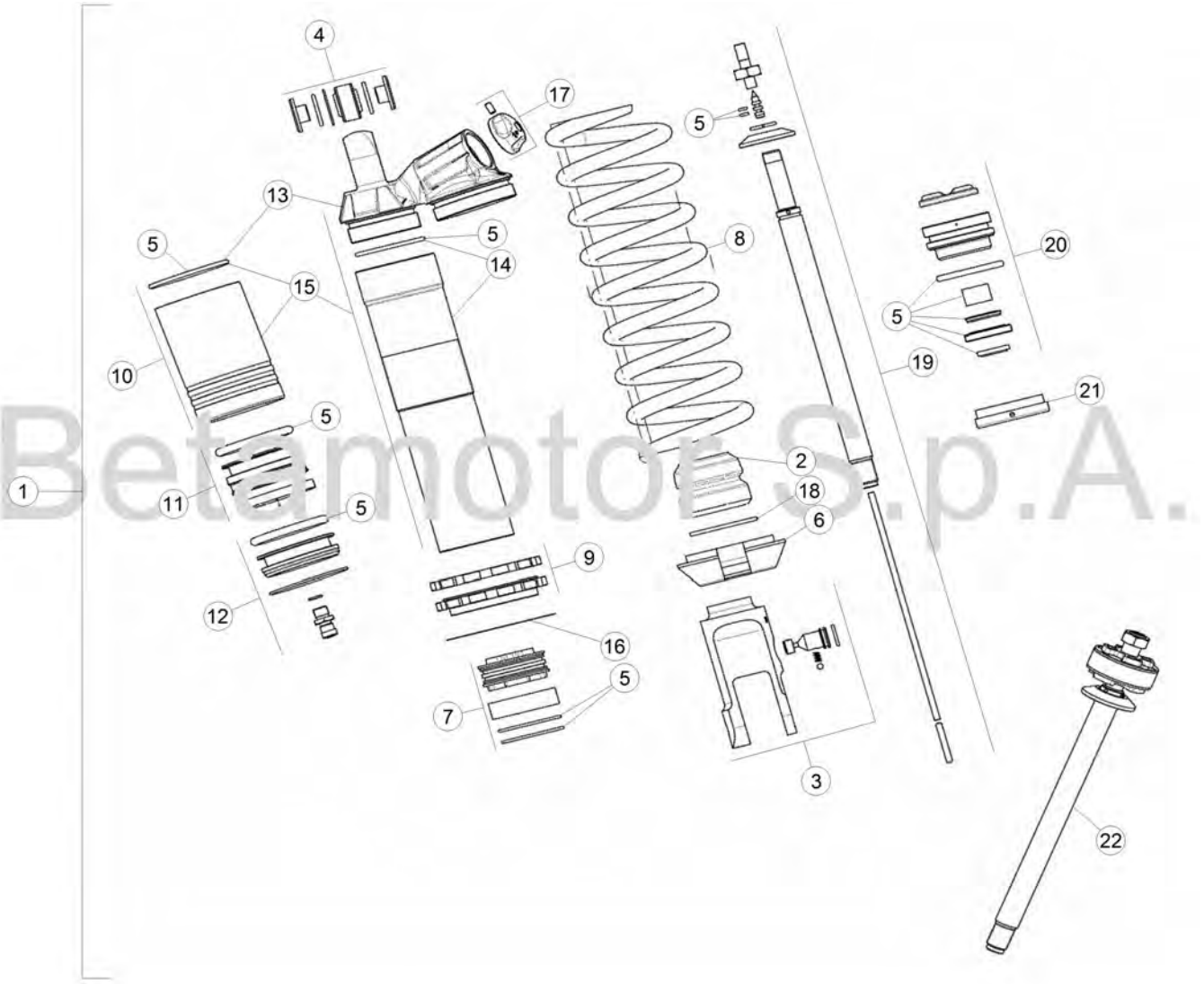

Betamotor S.p.A.

© Copyright 2018 Betamotor S.p.A.

Tav.33A

Pos Loc Pos Ps Pos	Numero Number Numéro Número Nummer	Q.tà Q.ty Q.té M.ge C.ad	Nota Note Note Nota Anm.	Descrizione	Description	Désignation	Beschreibung	Descripciòn
1	026.33.011.80.00	1		Ammortizzatore completo	Shock absorber assembly	Amortisseur complet	Stoßdämpfer komplett	Amortiguador completo
2	020.33.141.00.00	1		Tampone	Buffer	Silentbloc	Puffer	Silent-block
3	026.33.023.00.00	1		Gruppo forchetta	Shock absorber inf. Connection	Fxation inférieur ammortissateur	Untere befestigung stossdampfer	Fijador inferior amortiguador
4	13.86078.800	1		Kit distanziali ammortizzatore	Damper spacer kit	Jeu entretoises amortisseur	Kit Stoßdämpfer Distanz	Juego distanciador amortiguador
5	026.33.015.82.00	1		Guarnizione - kit	Packing - kit	Joint - Jeu	Dichtungsatz	Jjunta - kit
6	15.39110.000	1		Fondello	Cup	Godet	Deckel	Cazoleta
7	026.33.020.00.00	1		Pistone	Piston	Piston	Kolben	Pistón
8	026.33.022.00.00	1		Molla	Spring	Ressort	Feder	Muelle
9	026.33.019.00.00	1		Ghiera ammortizzatore	Damper adjusting ring nut	Collier de réglage amortisseur	Einstellzwinge Stoßdämpfer	Virola aiuste amortiguador
10	026.33.012.00.00	1		Serbatoio ammortizzatore	Shock absorber tank	Réservoir de l'amortisseur	Gasbehälter für Stoßdämpfer	Depósito amortiguador
11	026.33.013.00.00	1		Membrana	Diaphragm	Membrane	Membrane	Membrana
12	026.33.014.00.00	1		Tappo	Plug	Bouchon	Verschluß	Tapón
13	026.33.016.00.00	1		Tappo	Plug	Bouchon	Verschluß	Tapón
14	026.33.017.00.00	1		Corpo ammortizzatore	Damper body	Corps de l'amortisseur	Dämpfungskörpers	Cuerpo amortiguador
15	026.33.018.00.00	1		Corpo ammortizzatore	Damper body	Corps de l'amortisseur	Dämpfungskörpers	Cuerpo amortiguador
16	031.33.012.00.00	1		Rosetta	Washer	Rondelle	Federring	Arandela
17	026.33.021.00.00	1		Registro	Brake ad. sc.	Vis régl. fr.	Einstellschraube	Tornilllo de reg.
18	031.33.014.00.00	1		Rondella	Washer	Rondelle	U.Scheibe	Arandela
19	026.33.024.00.00	1		Stelo	Stem	Tige	Stange	Varilla
20	026.33.025.00.00	1		Guida	Rail	Guide	Führung	Guía
21	026.33.026.00.00	1		Tappo	Plug	Bouchon	Verschluß	Tapón
22	026.33.027.80.00	1		Stelo completo	Operating rod, assy.	Tige compl.	Kolbenstange, kompl.	Varilla completa

Tav.33B

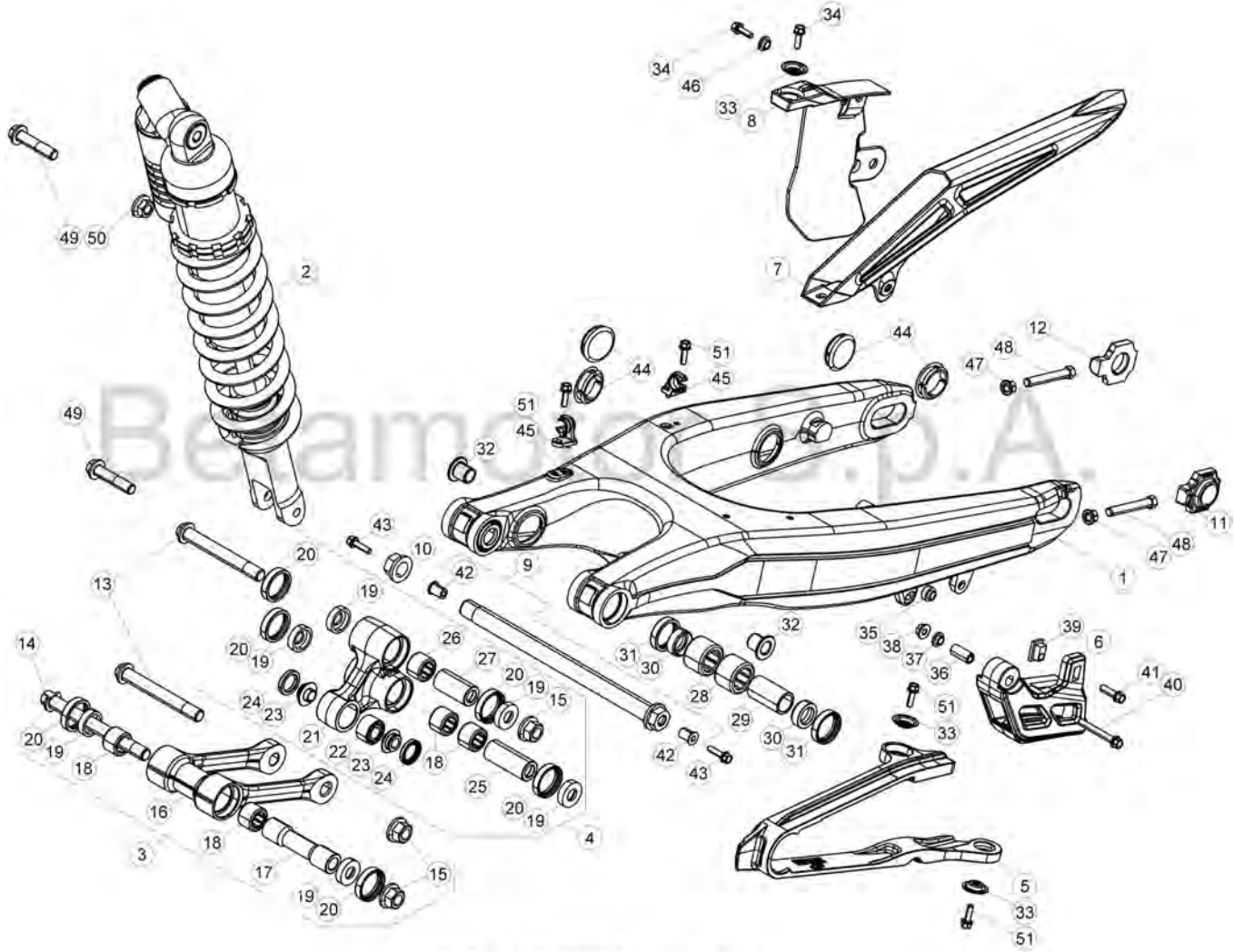

© Copyright 2017 Betamotor S.p.A.

Tav.33B

Pos Loc Pos Ps Pos	Numero Number Numéro Número Nummer	Q.tà Q.ty Q.té M.ge C.ad	Nota Note Note Nota Anm.	Descrizione	Description	Désignation	Beschreibung	Descripciòn
1	031.33.019.00.59	1		Forcellone	Big fork	Fourche	Radschwinge	Horquilla
2	026.33.011.80.00	1		Ammortizzatore completo	Shock absorber assembly	Amortisseur complet	Stoßdämpfer komplett	Amortiguador completo
3	020.33.030.80.00	1		Biellетta	Connecting rod	Biellette	Bolzensange	Bieleta
4	020.33.020.80.00	1		Bilanciere	Lever	Balancier	Kipphebel	Balancin
5	020.33.015.00.00	1		Tassello guidacatena super.	Upper sliding block	Cheville guide de chaine sup.	Schwingenschleifklotz oben	Protector cadena superior
6	29.10071.000	1		Tassello guidacatena infer.	Lower sliding block	Cheville guide de chaine inf.	Schwingenschleifklotz unten	Protector cadena inferior
7	12.88591.159	1		Copricatena superiore	Up. Chain cover	Couvre-chaine superieur	Kettenschutz oben	Cubrecadena superior
8	12.88594.159	1		Copricatena inferiore	Lower chain cover	Couvre-chaine inferieur	Kettenschutz unten	Cubrecadena inferior
9	031.33.142.80.00	1		Perno forcellone	Swingarm pivot	Axe fourche AR.	Schwingenbolzen	Eje basculante
10	13.27121.000	1		Dado speciale	Special nut	Ecrou spéciale	Spezialmutter	Tuerca especial
11	29.11866.100	1		Tendicatena SX	Chain adijuster L.	Tendeur de chaine G.	Ketterspanne L.	Tensor de cadena I.
11	031.33.003.42.50	1	RACING	Tendicatena SX	Chain adijuster L.	Tendeur de chaine G.	Ketterspanne L.	Tensor de cadena I.
12	29.11865.100	1		Tendicatena DX	Chain adjuster R.	Tendeur de chaine D.	Kettenspanner R.	Tensor de cadena D.
12	031.33.002.42.50	1	RACING	Tendicatena DX	Chain adjuster R.	Tendeur de chaine D.	Kettenspanner R.	Tensor de cadena D.
13	11.63992.000	2		Vite speciale M12	Special screw M12	Vis spéciale M12	Spezialschraube M12	Tornillo especial M12
14	020.33.032.00.00	1		Vite speciale M12	Special screw M12	Vis spéciale M12	Spezialschraube M12	Tornillo especial M12
15	13.21130.000	3		Dado autobloccante M12	Self locking nut M12	Ecrou de sécurité M12	Mutter, selbstsichernd M12	Tuerca de seguridad M12
16	020.33.030.00.00	1		Biellетta	Connecting rod	Biellette	Bolzensange	Bieleta
17	020.33.031.00.00	1		Distanziale	Spacer	Entretoise	Distanzstück	Distanciador
18	11.22055.000	4		Boccola a rulli 20x26x16	Roller bearing 20x26x16	Douille à roulements 20x26x16	Rollenbuchse 20x26x16	Caja de grasa de rodillos 20x26x16
19	28.14083.000	6		Scodellino	Stop washer	Rondelle d' ar	Federaufnahme	Platillo
20	10.64481.000	6		Paraolio	Oil seal	Pare-huile	Dichtring	Sello de lub.
21	020.33.020.00.00	1		Bilanciere	Lever	Balancier	Kipphebel	Balancin
22	16.17310.000	1		Boccola a rulli 12x24x30	Roller bearing 12x24x30	Douille à roulements 12x24x30	Rollenbuchse 12x24x30	Caja de grasa de rodillos 12x24x30
23	11.21920.000	2		Boccola	Bush	Moyeu	Büchse	Buje
24	10.56020.000	2		Paraolio 16x24x4	Oil seal 16x24x4	Pare-huile 16x24x4	Dichtring 16x24x4	Sello de lub. 16x24x4
25	13.62813.000	1		Distanziale 12x20x50	Spacer 12x20x50	Entretoise 12x20x50	Distanzstück 12x20x50	Distanciador 12x20x50
26	11.22061.000	1		Boccola a rulli 20x26x30	Roller bearing 20x26x30	Douille à roulements 20x26x30	Rollenbuchse 20x26x30	Caja de grasa de rodillos 20x26x30
27	13.62812.000	1		Distanziale 12x20x40	Spacer 12x20x40	Entretoise 12x20x40	Distanzstück 12x20x40	Distanciador 12x20x40
28	11.22056.000	4		Boccola a rullini 22x28x12	Roller cage 22x28x12	Cage Aiguille 22x28x12	Rollenkäfig 22x28x12	Jaula rodillos 22x28x12
29	13.49183.000	2		Distanziale forcellone	Big fork spacer	Entretoise fourche	Distanzstück Radschwinge	Distanciador horquilla
30	28.14081.000	4		Scodellino	Stop washer	Rondelle d' ar	Federaufnahme	Platillo
31	10.64481.000	4		Paraolio	Oil seal	Pare-huile	Dichtring	Sello de lub.
32	020.33.001.00.00	2		Boccola	Bush	Moyeu	Büchse	Buje
33	27.74786.000	3		Rondella bombata	Kasher	Rondelle	Scheibe	Arandela
34	11.46360.000	2		Bullone flangiato M5x16	Head Flanged bolt M5x16	Boulon Bridé M5x16	Bundbolzen M5x16	Buló n con Brida M5x16
35	13.12610.000	1		Dado	Nut	Ecrou	Mutter	Tuerca
36	13.49191.000	1		Distanziale	Spacer	Entretoise	Distanzstück	Distanciador
37	13.54820.000	1		Distanziale 6,5x9,0x13,5	Spacer 6,5x9,0x13,5	Entretoise 6,5x9,0x13,5	Distanzstück 6,5x9,0x13,5	Distanciador 6,5x9,0x13,5
38	13.13020.000	1		Dado autobloccante M6	Self locking nut M6	Ecrou de sécurité M6	Mutter, selbstsichernd M6	Tuerca de seguridad M6
39	13.48868.000	1		Distanziale tassello guidacatena	Sliding block spacer	Entretoise cheville guide de chaine	Abstandstück Schwingenschleifklotz	Separador protector cadena/basculante
40	11.05535.000	1		Bullone 6.50 rs ch 8	Bolt 6.50 rs ch 8	Boulon 6.50 rs ch 8	Bolzen 6.50 rs ch 8	Tornillo 6.50 rs ch 8
41	11.49070.000	1		Bullone 6x20 ch rs	Bolt 6x20 ch rs	Boulon 6x20 ch rs	Bolzen 6x20 ch rs	Tornillo 6x20 ch rs
42	27.33740.000	2		Rivetto filettato M6	Threaded rivet M6	Rivet fileté M6	Niete mit gewinde M6	Remache roscado M6
43	11.46401.000	2		Bullone M5x20	Bolt M5x20	Boulon M5x20	Bolzen M5x20	Tornillo M5x20
44	29.10596.136	4		Tappo forcellone D30	Big fork plug D30	Bouchon fourche D30	Radschwinge verschluß D30	Tapón horquilla D30
45	15.14605.000	2		Passatubo	Grommet	Passe-tube	Rohrdurchgang	Pasa-tubo
46	13.54820.000	1		Distanziale 6,5x9,0x13,5	Spacer 6,5x9,0x13,5	Entretoise 6,5x9,0x13,5	Distanzstück 6,5x9,0x13,5	Distanciador 6,5x9,0x13,5
47	13.17122.000	2		Dado flangiato M8 CH13	Flanged nut M8 CH13	Ecrou bordé M8 CH13	Flanschmutter M8 CH13	Tuerca embridada M8 CH13
48	11.55909.000	2		Bullone M8x55	Bolt M8x55	Boulon M8x55	Bolzen M8x55	Tornillo M8x55
49	11.62050.000	2		Bullone fiss. ammortzzatore M10x45	Damper sec. bolt M10x45	Boulon fix. amortisseur M10x45	Befestigungsbolzen M10x45	Tornillo fij amortiguador M10x45
50	13.21050.000	1		Dado flangiato M10X1,25	Flanged nut M10X1,25	Ecrou bordé M10X1,25	Flanschmutter M10X1,25	Tuerca embridada M10X1,25
51	11.46251.000	4		Bullone flangiato M5x12	Head Flanged bolt M5x12	Boulon Bridé M5x12	Bundbolzen M5x12	Buló n con Brida M5x12

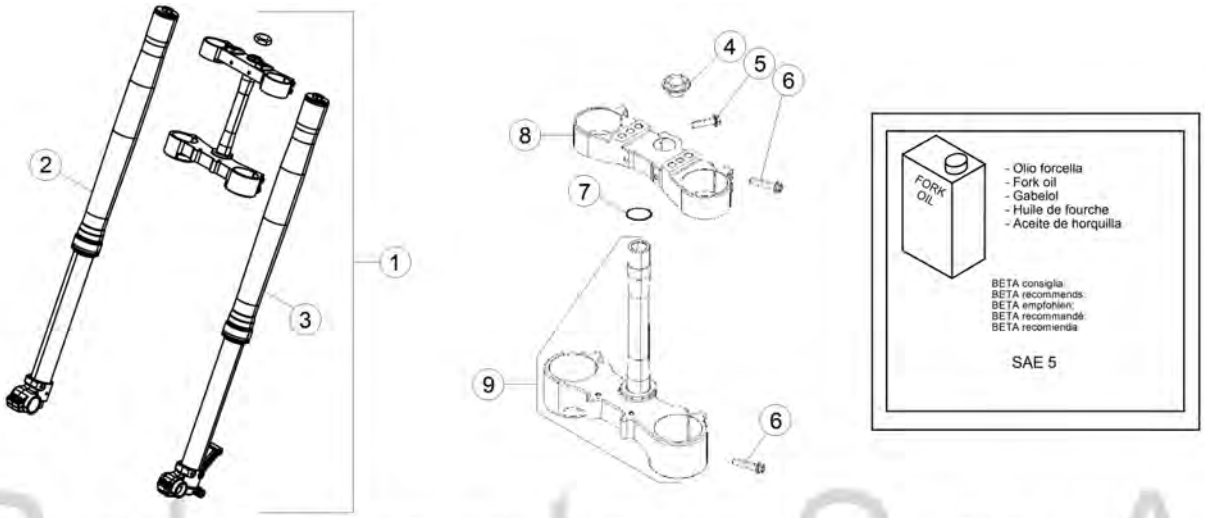

Betamotor S.p.A.

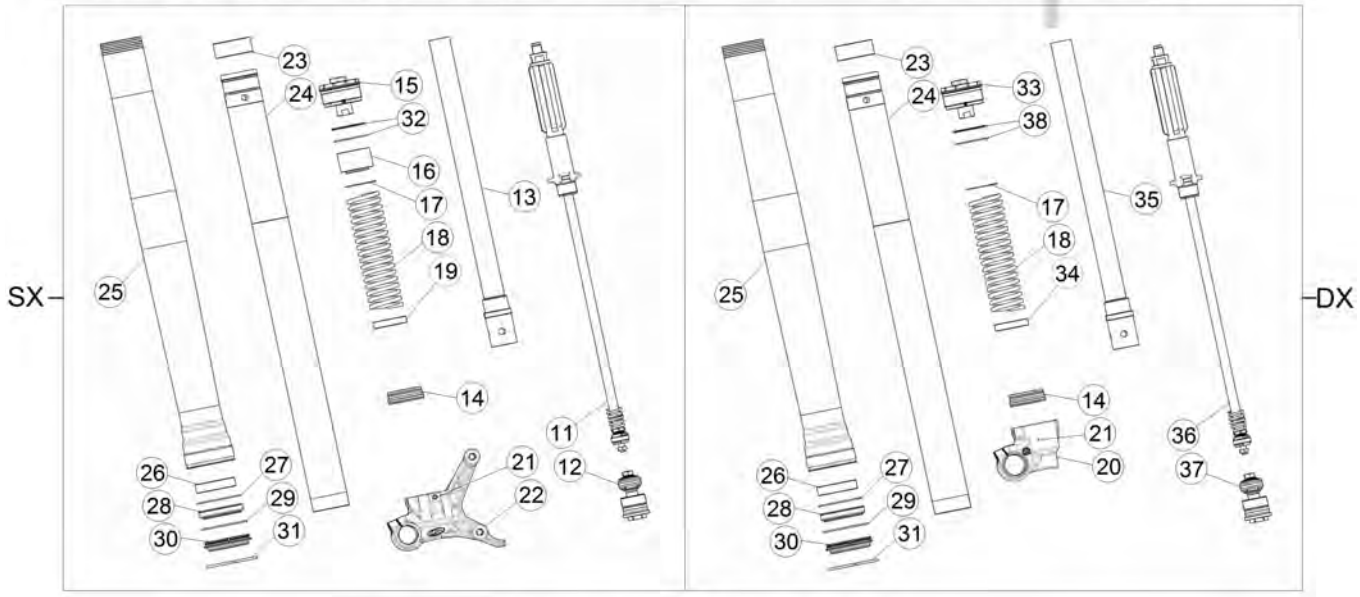

© Copyright 2018 Betamotor S.p.A.

Tav.34

Pos Loc Pos Ps Pos	Numero Number Numéro Número Nummer	Q.tà Q.ty Q.té M.ge C.ad	Nota Note Note Nota Anm.	Descrizione	Description	Désignation	Beschreibung	Descripciòn
								STANDARD
1	026.34.042.82.00	1		Forcella	Fork	Fourche	Gabel	Horquilla
2	026.34.043.80.59	1		Gamba dx	RH leg	Tube D.	Rechte Beineinheit	Pata derecha
3	026.43.046.80.59	1		Gamba sx	LH leg	Tube G.	Linke Beineinheit	Pata izquierda
4	020.34.004.00.00	1		Dado 20X1,5	Nut 20X1,5	Ecrou 20X1,5	Mutter 20X1,5	Tuerca 20X1,5
5	11.55440.000	1		Bullone 8x30 ch10 rs	Bolt 8x30 ch10 rs	Boulon 8x30 ch10 rs	Bolzen 8x30 ch10 rs	Tornillo 8x30 ch10 rs
6	11.55510.000	8		Bullone M8x40	Bolt M8x40	Boulon M8x40	Bolzen M8x40	Tornillo M8x40
7	10.66420.000	1		Anello OR 20,22.3,53 NBR	O-Ring 20,22.3,53 NBR	Bague d'étanchéité 20,22.3,53 NBR	O-Ring 20,22.3,53 NBR	Anillo OR 20,22.3,53 NBR
8	026.34.024.42.04	1		Piastra di sterzo superiore	Steering head	Tête de direction	Gabelkopf	Tija superior
9	026.34.035.82.04	1		Piastra di sterzo inferiore	Steering crown with pin	Socle de direction avec pivot	Untere Gabelbrücke mit Bolzen	Base de dirección con perno
11	026.34.051.00.00	1		Gruppo estensione	Rebound unit	Ecrou groupe détente	Zugstufengruppe	Grupo rebote
12	026.34.052.00.00	1		Gruppo compressione	Compression unit	Groupe compression	Druckstufengruppe	Grupo compresión
13	026.34.017.00.00	1		Tubo interno	Inner tube	Tube intérieur	Gabel Innenrohr	Tubo interior
14	020.34.313.00.00	2		Anello appoggio stelo + O-Ring	Stem supporting ring + O-Ring	Anneau appui tige + O-Ring	Anlagering für stange + O-Ring	Anillo de apoyo varilla + O-Ring
15	026.34.053.00.00	1		Tappo	Plug	Bouchon	Verschluß	Tapón
16	026.34.358.00.00	1		Distanziale	Spacer	Entretoise	Distanzstück	Distanciador
17	031.34.323.00.00	2		Rosetta	Washer	Rondelle	Federring	Arandela
18	026.34.040.00.00	2		Molla	Spring	Ressort	Feder	Muelle
19	031.34.026.00.00	1		Anello centraggio	Centering ring	Bague de centrage	Zentrierring	Anillo de centraje
20	026.34.054.00.00	1		Piede forcella	Fork foot	Pied de fourche	Gabelfuß	Pata horquilla
21	020.34.308.00.00	2		Grano	Dowel	Goujon	Stift	Clavija
22	026.34.055.00.00	1		Piede forcella	Fork foot	Pied de fourche	Gabelfuß	Pata horquilla
23	020.34.320.00.00	2		Boccola Ø49/47 L 20	Bush Ø49/47 L 20	Moyeu Ø49/47 L 20	Büchse Ø49/47 L 20	Buje Ø49/47 L 20
24	031.34.021.00.00	2		Stelo	Stem	Tige	Stange	Varilla
25	026.34.363.00.00	2		Fodero	Sleeve	Protection	Schutzstuck	Protección
26	031.34.020.00.00	2		Boccola ø52/48 L15	Bush ø52/48 L15	Moyeu ø52/48 L15	Büchse ø52/48 L15	Buje ø52/48 L15
27	020.34.318.00.00	2		Distanziale	Spacer	Entretoise	Distanzstück	Distanciador
28	020.34.317.00.00	2		Guarnizione	Packing	Joint	Dichtung	Junta
29	020.34.316.00.00	2		Seeger Ø58,45	Circlip Ø58,45	Circlip Ø58,45	Seeger Ø58,45	Seeger Ø58,45
30	020.34.315.00.00	2		Raschiapolvere	Dust scraper	Graffe poussiere	Staubabstreifer	Esc. polvo
31	026.34.364.00.00	2		Anello d'arresto	Check ring	Bague d'arrêt	Sicherungsring	Anillo de bloqueo
32	031.34.023.00.00	1		Svincolo molla	Anti-friction spring	Anti-friction pour ressort	Anti-Reibungsfeder	Antifricción muelle
33	026.34.056.00.00	1		Tappo	Plug	Bouchon	Verschluß	Tapón
34	026.34.057.00.00	1		Anello	Ring	Circlips	Ring	Anillo
35	026.34.058.00.00	1		Tubo	Tube	Tuyau	Schlauch	Tubo
36	026.34.059.00.00	1		Gruppo estensione	Rebound unit	Ecrou groupe détente	Zugstufengruppe	Grupo rebote
37	026.34.060.00.00	1		Gruppo compressione	Compression unit	Groupe compression	Druckstufengruppe	Grupo compresión
38	031.34.323.00.00	1		Rosetta	Washer	Rondelle	Federring	Arandela

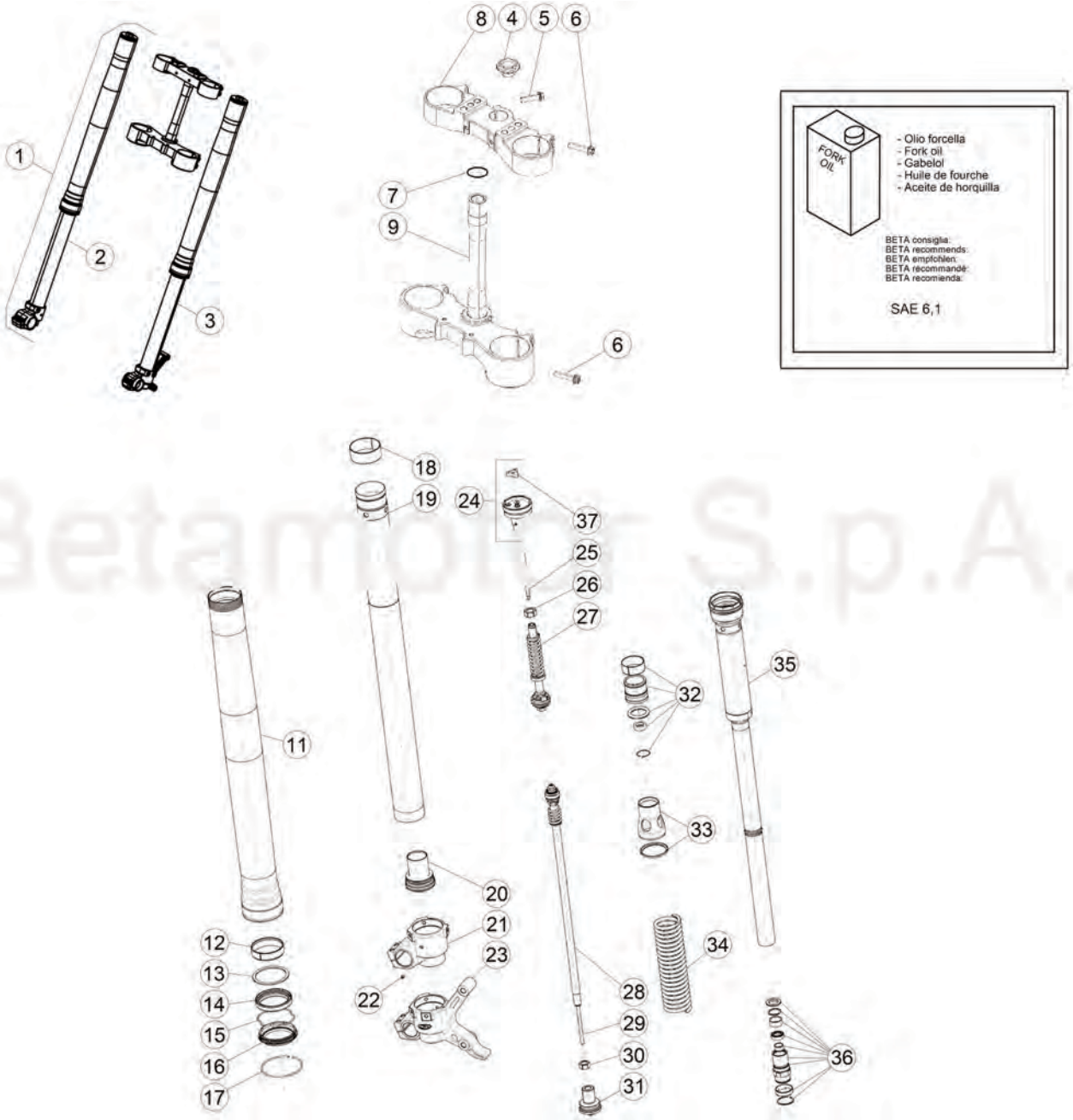

© Copyright 2016 Betamotor S.p.A.

Tav.34

Pos Loc Pos Ps Pos	Numero Number Numéro Número Nummer	Q.tà Q.ty Q.té M.ge C.ad	Nota Note Note Nota Anm.	Descrizione	Description	Désignation	Beschreibung	Descripciòn
								RACING
1	026.34.048.82.00	1		Forcella	Frotn fork	Fourche	Schaltgabel	Horquilla
2	026.34.049.80.53	1		Gamba forcella DX	RH fork leg	Tube fourche D.	Rechte Beineinheit	Pata derecha horquilla
3	026.34.050.80.53	1		Gamba forcella SX	LH fork leg	Tube fourche G.	Linke Beineinheit	Pata izquierda horquilla
4	020.34.004.00.00	1		Dado 20X1,5	Nut 20X1,5	Ecrou 20X1,5	Mutter 20X1,5	Tuerca 20X1,5
5	11.55440.000	1		Bullone 8x30 ch10 rs	Bolt 8x30 ch10 rs	Boulon 8x30 ch10 rs	Bolzen 8x30 ch10 rs	Tornillo 8x30 ch10 rs
6	11.55510.000	8		Bullone M8x40	Bolt M8x40	Boulon M8x40	Bolzen M8x40	Tornillo M8x40
7	10.66420.000	1		Anello OR 20,22.3,53 NBR	O-Ring 20,22.3,53 NBR	Bague d'é tanché ité 20,22.3,53 NBR	O-Ring 20,22.3,53 NBR	Anillo OR 20,22.3,53 NBR
8	026.34.036.42.59	1		Piastra di stezo superiore	Steering head	Tê te de direction	Gabelkopf oben	Tija superior
9	026.34.037.82.59	1		Piastra di stezo inferiore	Steering head base	Socle de direction	Gabelkopf unten	Tija inferior
11	026.34.061.00.00	2		Fodero	Sleeve	Protection	Schutzstuck	Protecció n
12	031.34.020.00.00	2		Boccola ø52/48 L15	Bush ø52/48 L15	Moyeu ø52/48 L15	Bü chse ø52/48 L15	Buje ø52/48 L15
13	020.34.318.00.00	2		Distanziale	Spacer	Entretoise	Distanzstü ck	Distanciador
14	020.34.317.00.00	2		Guarnizione	Packing	Joint	Dichtung	Junta
15	020.34.316.00.00	2		Seeger Ø58,45	Circlip Ø58,45	Circlip Ø58,45	Seeger Ø58,45	Seeger Ø58,45
16	020.34.315.00.00	2		Raschiapolvere	Dust scraper	Graffe poussiere	Staubabstreifer	Esc. polvo
17	026.34.364.00.00	2		Seeger Ø64 filo Ø3	Circlip Ø64 filo Ø3	Circlip Ø64 filo Ø3	Seeger Ø64 filo Ø3	Seeger Ø64 filo Ø3
18	020.34.320.00.00	2		Boccola Ø49/47 L 20	Bush Ø49/47 L 20	Moyeu Ø49/47 L 20	Bü chse Ø49/47 L 20	Buje Ø49/47 L 20
19	031.34.021.00.00	2		Stelo	Stem	Tige	Stange	Varilla
20	026.34.345.00.00	2		Sede registro	Adjuster seat	Siè ge du ré glage	Sitz Einstellschraube	Asiento de la regulació n
21	026.34.054.00.00	1		Piede forcella dx	R.H. fork foot	Pied de fourche droit	Gabelfuß rechts	Pata horquilla der.
22	020.34.308.00.00	2		Grano	Dowel	Goujon	Stift	Clavija
23	026.34.055.00.00	1		Piede forcella sx	L.H. fork foot	Pied de fourche gauche	Gabelfuß links	Pata horquilla izq.
24	031.34.063.00.00	2		Gruppo tappo	Plug assy	Groupe bouchon	Verschlussgruppe Kpl	Grupo tapó n
25	026.34.347.00.00	2		Asta	Rod	Tige	Stange	Varilla
26	026.34.348.00.00	2		Dado	Nut	Ecrou	Mutter	Tuerca
27	026.34.064.00.00	2		Gruppo compressione	Compression unit	Groupe compression	Druckstufengruppe	Grupo compresió n
28	026.34.065.00.00	2		Gruppo estensione	Rebound unit	Ecrou groupe dé tente	Zugstufengruppe	Grupo rebote
29	031.34.345.00.00	2		Asse	Rod	Tige	Stange	Varilla
30	031.34.346.00.00	2		Dado	Nut	Ecrou	Mutter	Tuerca
31	031.34.347.00.00	2		Registro gruppo estensione	Rebound unit adjuster	Ré glage groupe dé tente	Einstellung Zugstufengruppe	Regulació n grupo rebote
32	026.34.354.00.00	2		Gruppo pistone	Piston assy.	Esemble piston	Gruppe Kolben	Grupo pistó n
33	026.34.355.00.00	2		Gruppo guidamolla	Spring guide, assy.	Groupe guide ressort	Gruppe Federfü hrung	Grupo guia resorte
34	026.34.040.00.00	2		Molla K 4,2 N/mm	Spring K 4,2 N/mm	Ressort K 4,2 N/mm	Feder K 4,2 N/mm	Muelle K 4,2 N/mm
35	031.34.348.00.00	2		Gruppo tubi interni	Inner tubes, assy.	Groupe tuyaux int.	Gruppe innerer Gabelrohr	Grupo tubos inter.
36	031.34.349.00.00	2		Gruppo guidastelo	Guide rod assy.	Groupe guide tige	Pumpenstü ckfü hrunggruppe	Grupo guja espiga
37	031.34.350.00.00	2		Pomello	Knob	Bouton	Drehknopf	Pomo

Tav.35

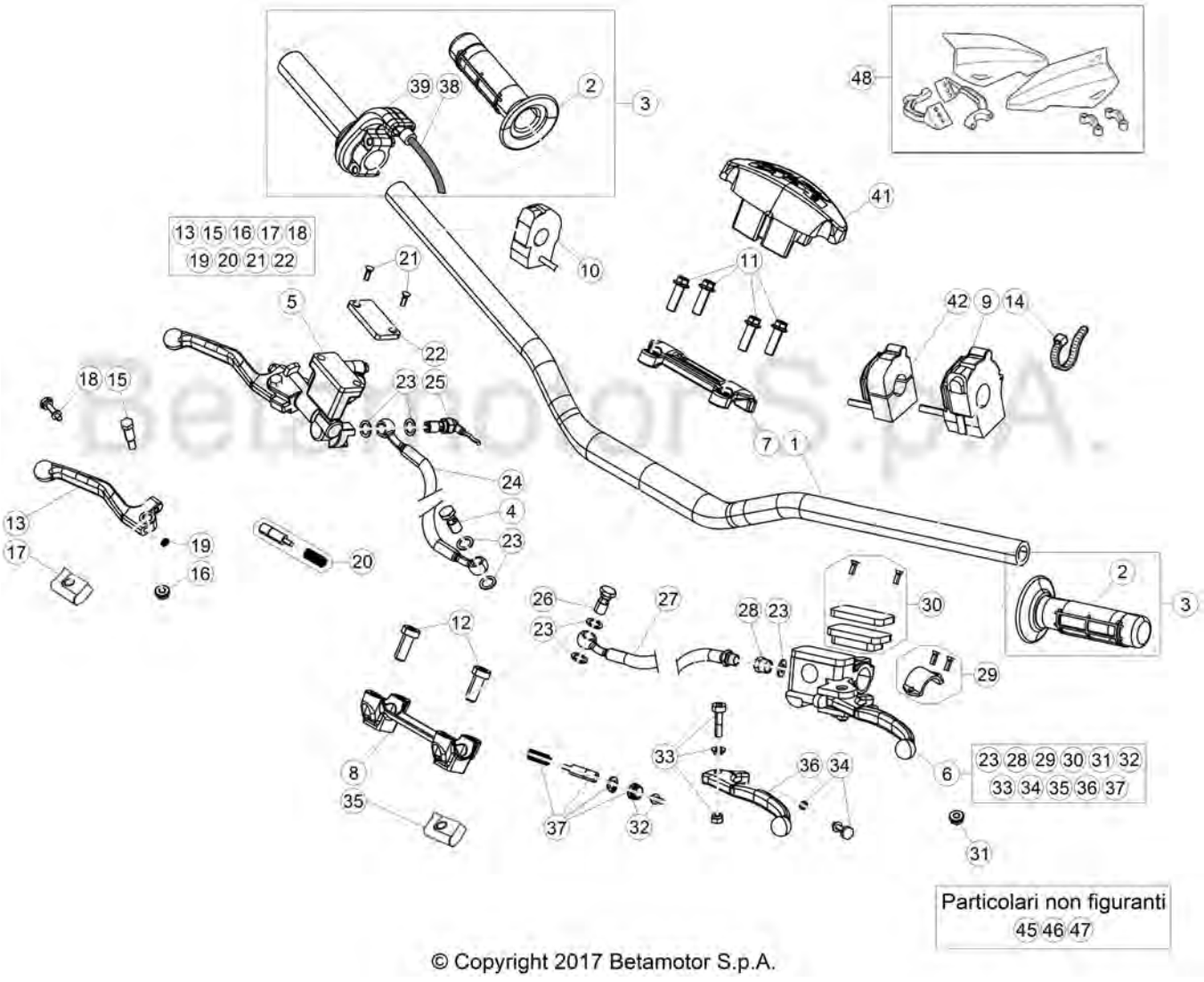

© Copyright 2017 Betamotor S.p.A.

Tav.35

Pos Loc Pos Ps Pos	Numero Number Numéro Número Nummer	Q.tà Q.ty Q.té M.ge C.ad	Nota Note Note Nota Anm.	Descrizione	Description	Désignation	Beschreibung	Descripciòn
1	026.35.000.00.59	1		Manubrio	Handlebars	Guidon	Lenker	Manillar
2	036.35.005.00.00	1		Coppia manopole	Grips (couple)	Poignées (couple)	Handgriffpaar	Manecilla (juego)
3	026.35.002.80.00	1		Comando gas completo	Throttle control compl.	Commande gaz compl.	Gasgriff kpl.	Accionamiento acelerador co
4	11.65053.000	1		Bullone forato 10x1,25	Pierced bolt 10x1,25	Boulon avec trou 10x1,25	Bolzen 10x1,25	Tornillo 10x1,25
5	21.02057.059	1		Leva freno ant.	Fr. br. lever	Lev. fr. AV.	Vorderradbremshebel	Pal. fr. del.
6	020.35.020.00.00	1		Leva comando frizione	Clutch control lever	Levier de commande embrayage	Kupplungshebel	Palanca mando embrague
7	12.08253.000	1		Cavallotto superiore	Upper u bolt	Etrier sup.	Obere Brücke	Brida sup.
8	12.08263.000	1		Cavallotto inferiore	Lower u bolt	Etrier inférieure	Untere Brücke	Brida inferior
9	016.35.010.00.00	1		Dispositivo luci c/frecce	Lights control device with blinkers	Dispositif commande feux avec clignotants	Lichtschalter mit blinkgeber	Dispositivo mando luce con intermitentes
10	026.40.047.00.00	1		Dispositivo ON-OFF	ON-OFF device	Dispositif ON-OFF	Lichtschalter ON-OFF	Dispositivo ON-OFF
11	31.64070.000	4		Vite flangiata 8x30	Flanged screw 8x30	Vis à brides 8x30	Flanschschraube 8x30	Tornillo rebordeado 8x30
12	31.65626.000	2		Vite a brugola M10 25	Allen screw M10 25	Vis à 6 pans M10 25	Sechskantschraube M10 25	Tornillo a llave allen M10 25
13	21.27104.000	1		Leva freno	Brake lever	Levier du frein	Bremshebel	Palanca de freno
14	15.14264.000	3		Fascetta	Clamp	Collier	Schelle	Abrazadera
15	31.96832.000	1		Perno leva freno	Brake lever pin	Goujon levier frein	Bremshebelstift	Perno leva freno
16	13.30911.000	1		Dado	Nut	Ecrou	Mutter	Tuerca
17	16.33841.000	1		Coprileva	Lever cover	Couvre levier	Hebeldeckel	Cubre-palanca
18	31.88604.000	1		Vite regol. leva	Adjusting screw	Vis réglage	Einstellschrauben	Tornillo reg.
19	22.38704.000	1		Molla registro leva freno ant.	Front brake lever adjust spring	Ressort enregistrement levier	Regelfeder vorderradbremse	Muelle regul. bomba freno
20	20.08258.000	1		Pistoncino completo pompa	Piston assy, pump	Piston compl. pompe	Kolben klpt. Pumpe	Piston completo bomba
21	31.23410.052	2		Vite fiss. coperchio	Cover sec. screw	Vis de fix. couvercle	Schraube	Tornillo
22	031.36.003.82.00	1		Coperchio serbatoio olio	Oil filler cover	Couvercle réservoir huile	Ölverschlußdeckel	Tapa depósito aceite
23	16.50510.000	7		Guarnizione 10x15x1 in rame	Gasket 10x15x1 copper	Joint 10x15x1 cuivre	Dichtung 10x15x1 Kupfer	Junta 10.15.1 (cobre)
24	29.09108.000	1		Tubo Freno Ant.	Front brake tube	Tuyau du frein AV.	Vordere Bremsleitung	Tubo freno delantero
25	18.89621.000	1		Interruttore stop	Stop switch	Interrupteur stop	Stopschalter	Interruptor stop
26	11.65040.000	1		Bullone forato 10x1 x tubo freno	Special bolt	Boulon 10x1 x tube frein	Hohlschraube F.Bremse	Tornillo esp. talad.10.1
27	026.35.014.00.00	1		Tubo frizione	Clutch tube	Canalisation embrague	Kupplungsrohr	Tubo embrague
28	020.35.032.00.00	1		Raccordo	Joint.p.	Raccord	Stutzen	Racor
29	020.35.025.00.00	1		Cavallotto	U bolt	Etrier	Brücke	Brida
30	020.35.023.00.00	1		Tappo serbatoio pompa	Master cyl. tank plug	Bouchon réservoir maître cylindre	Behälterverschluß Hauptbremszylinder	Tapón depósito bomba freno
31	020.35.028.00.00	1		Antiemulsione	Antiemulsion	Antiemulsion	Eulsionswidriger	Antiemulsion
32	020.35.029.00.00	1		Puntalino leva pompa	Push piece	Piece de pression	Druckstück	Varilla de presión
33	020.35.024.00.00	1		Perno leva	Lever pin	Goujon levier	Hebelstift	Perno palanca
34	020.35.030.00.00	1		Guidamolla	Spring guide	Guide ressort	Federführung	Guia resorte
35	020.35.027.00.00	1		Gomma protezione leva	Lever protection grommet	Caoutchouc protection levier	Gummi Hebelschutz	Goma protección palanca
36	020.35.022.00.00	1		Leva frizione nuda	Clutch lever, only	Levier d' embrayage nue	Kupplungshebel	Palanca embrague
37	020.35.026.00.00	1		Kit pistoncino pompa	Piston kit master cyl.	Kit piston. maître cyl.	Kolbensatz hauptbremszylinder	Kit pistón bomba
38	026.35.011.82.00	1		Cavo comando gas	Throttle cable transmission	Transmission commande gaz	Bowdenzüg gasgriff	Transmisión mando gas
39	026.35.010.00.00	1		Comando gas	Throttle control	Commande gaz	Gasdrehgriff	Mando gas
40	031.35.013.00.00	1		Protezione	Protection	Protection	Schutz	Protección
41	031.35.001.00.00	1		Protezione manubrio	Handlebar protection	Protection guidon	Lenkerschutz	Protección manillar
42	031.40.003.00.00	1		Dispositivo switch mappa CDI	Switch for double map CDI	Selecteur mappe CDI	Mappingschalter CDI	Conmutador para cambiar el
45	12.30100.000	1	EU	Cavallotto leva freno c/attacco specchio	Brake lever U-bolt w/mirror fastening	Etrier levier du frein avec fixation retroviseur	Brücke Bremshebel mit Befestigung für Rückblickspiegel	Brida palanca freno con anclaje espejo
46	28.92927.000	1	EU	Specchio retrovisore dx.	R.H. rear mirror	Rétroviseur dr.	Rückspiegel R.	Retrovisor der.
47	031.35.008.00.00	1	EU	Specchio retrovisore sx.	L.H. rear mirror	Rétroviseur ga.	Rückspiegel L.	Retrovisor izq.
48	026.46.005.82.51	1	RACING	Kit paramani	Hand guards kit	Kit pare-mains	Kit Handshutz	Kit para manos

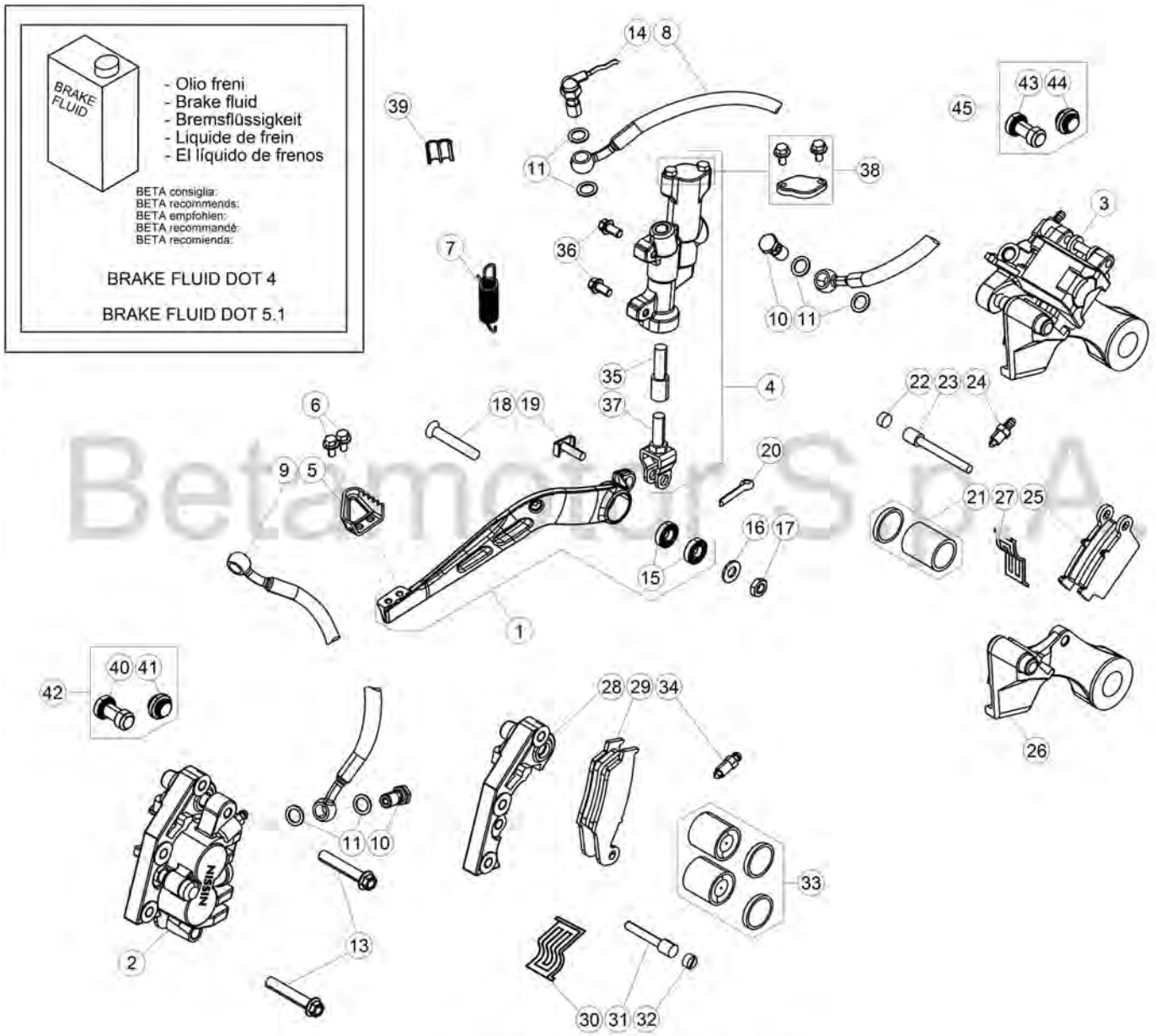

© Copyright 2018 Betamotor S.p.A.

Tav.36

Pos Loc Pos Ps Pos	Numero Number Numéro Número Nummer	Q.tà Q.ty Q.té M.ge C.ad	Nota Note Note Nota Anm.	Descrizione	Description	Désignation	Beschreibung	Descripciòn
1	020.36.001.80.00	1		Pedale freno	Brake pedal	Pédale frein	Fussbremspedal	Pedal freno
1	020.36.001.80.59	1	RACING	Pedale freno	Brake pedal	Pédale frein	Fussbremspedal	Pedal freno
2	25.03056.000	1		Pinza freno anteriore	Front disk brake caliper	Etrier de frein AV.	Bremszange-Scheibe	Pinza freno del.
3	25.03066.000	1		Pinza freno posteriore	Rear disk brake caliper	Etrier de frein AR.	Bremszange	Pinza del freno tras.
4	25.91178.000	1		Pompa freno posteriore	Rear brake cylinder	Maître cylindre frein ar.	Hauptbremszylinder Hinterradbremse	Bomba freno trasero
5	22.90053.000	1		Mozzetto	Hub	Moyeu	Nabe	Cubo
6	11.46251.000	2		Bullone flangiato M5x12	Head Flanged bolt M5x12	Boulon Bridé M5x12	Bundbolzen M5x12	Buló n con Brida M5x12
7	026.36.000.00.00	1		Molla ritorno pedale freno	Return brake pedal spring	Ressort de retour frein	Bremspedal Feder	Muelle retorno palanca freno
8	29.09428.000	1		Tubo Freno Posteriore	Rear brake tube	Tuyau du frein AR.	Hintere Bremsleitung	Tubo freno trasero
9	29.09108.000	1		Tubo Freno Ant.	Front brake tube	Tuyau du frein AV.	Vordere Bremsleitung	Tubo freno delantero
10	11.65053.000	2		Bullone forato 10x1,25	Pierced bolt 10x1,25	Boulon avec trou 10x1,25	Bolzen 10x1,25	Tornillo 10x1,25
11	16.50510.000	6		Guarnizione 10x15x1 in rame	Gasket 10x15x1 copper	Joint 10x15x1 cuivre	Dichtung 10x15x1 Kupfer	Junta 10.15.1 (cobre)
13	11.55510.000	2		Bullone M8x40 RS CH10	Bolt M8x40 RS CH10	Boulon M8x40 RS CH10	Bolzen M8x40 RS CH10	Tornillo M8x40 RS CH10
14	18.89621.000	1		Interruttore stop	Stop switch	Interrupteur stop	Stopschalter	Interruptor stop
15	12.93388.000	2		Cuscinetto 8x22x7	Bearing 8x22x7	Roulement 8x22x7	Lager 8x22x7	Cojinete 8x22x7
16	27.49500.000	1		Rondella 8x18	Washer 8x18	Rondelle 8x18	U.Scheibe 8x18	Arandela 8x18
17	13.17020.000	1		Dado autoblocc. Basso M8	Nut M8	Ecrou M8	Mutter M8	Tuerca M8
18	31.63985.000	1		Vite TSPCE 8.50 CL 10.9	Screw TSPCE 8.50 CL 10.9	Vis TSPCE 8.50 CL 10.9	Schraube TSPCE 8.50 CL 10.9	Tornillo TSPCE 8.50 CL 10.9
19	25.41830.000	1		Forcellino	Clip	Ressort	Fixiergabel	Horquilla
20	12.81995.000	1		Copiglia 2x15	Split pin 2x15	Goupille 2x15	Splint 2x15	Grupilla 2x15
21	20.02717.000	1		Kit pistoncini e guarniz. Pinza	Piston e oil seal for pliers	Jeu petit pistons et joint pinces	Reparatursatz Bremszange	Juego piston y guarnicion pinza
22	31.96821.000	1		Grano	Dowel	Goujon	Stift	Clavija
23	25.41860.000	1		Perno ancoraggio pastiglia	Pin hanger	Pivot ancrage	Halter brehsbelage	Varilla esp. Pastillas pinzas
24	28.91002.000	1		Sfiato	Breather	Reniflard	Entlüfter	Respiradero
25	25.25362.000	1		Pastiglie freno post.	Rear brake pads	Pastill. de freins AR.	Hinterbremsbelag	Pastillas frenos tras.
26	020.36.011.00.00	1		Staffa supporto pinza	Caliper support bracket	Bride support étrier	Bremssattelbefestigung	Brida soporte pinza
27	22.32208.000	1		Molla ferma pastiglie pinza	Brake pads spring for pliers	Ressort arret plaquettes	Haltefeder	Muelle pastillas pinza
28	020.36.012.00.00	1		Staffa supporto pinza	Caliper support bracket	Bride support étrier	Bremssattelbefestigung	Brida soporte pinza
29	25.25361.000	1		Pastiglie freno ant.	Front brake pads	Pastill. de freins AV.	Vorderbremsbelag	Pastillas frenos del.
30	22.32207.000	1		Molla ferma pastiglie pinza	Brake pads spring for pliers	Ressort arret plaquettes	Haltefeder	Muelle pastillas pinza
31	25.41859.000	1		Perno ancoraggio pastiglia	Pin hanger	Pivot ancrage	Halter brehsbelage	Varilla esp. Pastillas pinzas
32	31.96821.000	1		Grano	Dowel	Goujon	Stift	Clavija
33	20.02716.000	1		Kit pistoncini e guarniz. Pinza	Piston e oil seal for pliers	Jeu petit pistons et joint pinces	Reparatursatz Bremszange	Juego piston y guarnicion pinza
34	28.91001.000	1		Sfiato	Breather	Reniflard	Entlüfter	Respiradero
35	20.08276.000	1		Kit pistoncino pompa post.	Piston kit rear master cyl.	Kit piston. maître cyl. AR.	Kolbensatz hinterhauptbremszylinder	Kit pistón bomba tras.
36	31.30750.000	2		Vite M6x16	Screw M6x16	Vis M6x16	Schraube M6x16	Tornillo M6x16
37	20.08277.000	2		Kit leva	lever kit	Jeu levier	Hebelsatz	Juego palanca
38	20.08275.000	1		Kit serbatoio pompa	Kit, pump tank	Kit reservoir pompe	Deckel pumpstage	Kit deposito bomba
39	25.24442.000	1		Passacavo 6/8	Fair lead 6/8	Passe-fils 6/8	Kabelführung 6/8	Pasa-cable 6/8
40	036.36.002.00.00	1		Protezione	Protection	Protection	Schutzstück	Protección
41	036.36.003.00.00	1		Protezione	Protection	Protection	Schutzstück	Protección
42	036.36.006.82.00	1		Kit protezioni anteriore	Font protections kit	Jeu protections avant	Kit Vorne Schutzstück	Juego protecciónes delanteras
43	036.36.004.00.00	1		Protezione	Protection	Protection	Schutzstück	Protección
44	036.36.005.00.00	1		Protezione	Protection	Protection	Schutzstück	Protección
45	036.36.007.82.00	1		Kit protezioni posteriore	Rear protections kit	Jeu protections arrière	Kit Hintere Schutzstück	Juego protecciónes traseras

Tav.37

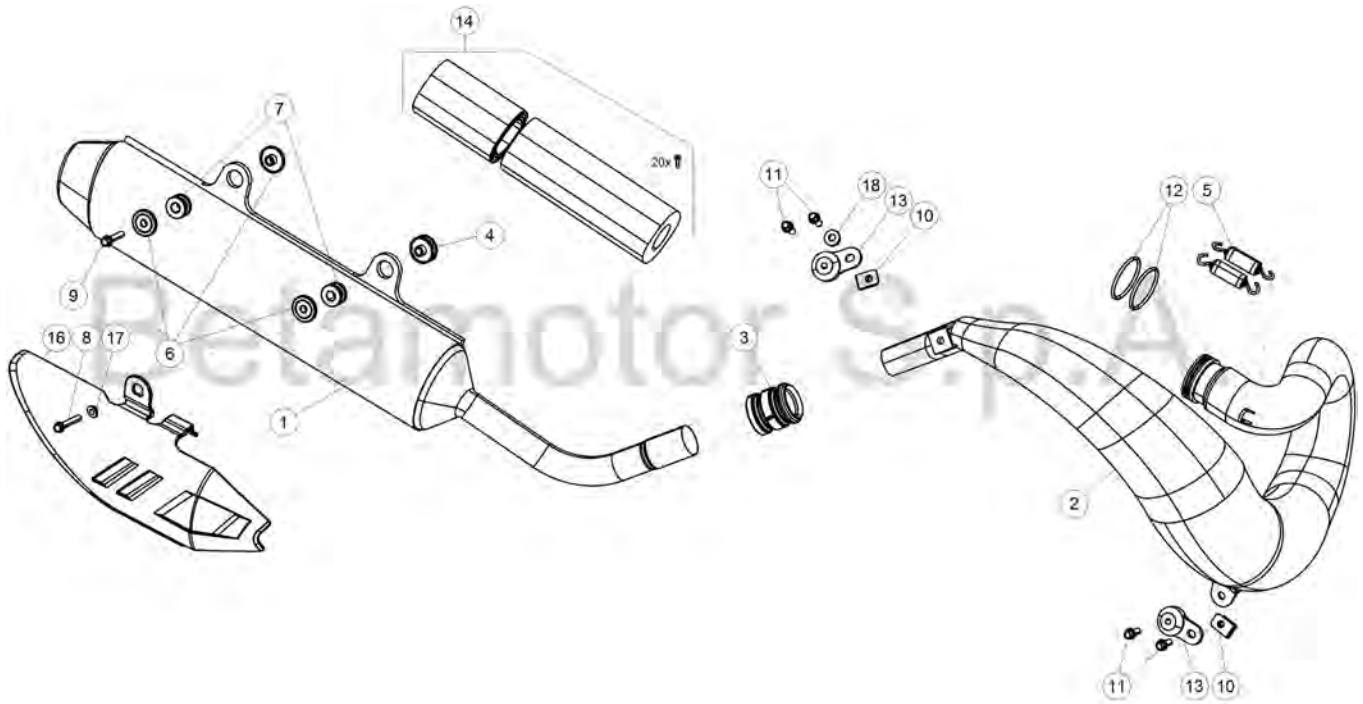

Betamotor S.p.A.

Particolari non figuranti
15

© Copyright 2018 Betamotor S.p.A.

Pos Loc Pos Ps Pos	Numero Number Numéro Número Nummer	Q.tà Q.ty Q.té M.ge C.ad	Nota Note Note Nota Anm.	Descrizione	Description	Désignation	Beschreibung	Descripciòn
1	026.37.024.80.00	1	250cc 250RACING	Silenziatore completo	Silencer complete	Silencieux complet	Endschalldämpfer	Silenciador completo
1	026.37.025.80.00	1	300cc 300RACING	Silenziatore completo	Silencer complete	Silencieux complet	Endschalldämpfer	Silenciador completo
2	026.37.023.00.00	1		Collettore di scarico	Exhaust manifold	Collecteur d'échapp.	Abgaskrümmer	Colector de escape
3	026.37.103.00.00	1		Guarnizione marmitta	Exhaust gasket	Joint pot d'echappement	Dichtung	Goma silenciador
4	026.37.004.00.00	1		Distanziale	Spacer	Entretoise	Distanzstück	Distanciador
5	026.37.005.00.00	2		Molla tubo di scarico	Exhaust pipe spring	Ressort tuyau echapp.	Krummerfeder	Muelle tubo de escape
6	026.37.006.00.00	3		Distanziale	Spacer	Entretoise	Distanzstück	Distanciador
7	28.91946.000	2		Silentbloc	Silentbloc	Silentbloc	Puffer	Silent-block
8	11.50360.000	1		Bullone M6x40	Bolt M6x40	Boulon M6x40	Bolzen M6x40	Tornillo M6x40
9	11.50300.000	1		Bullone 6x30 ch rs	Bolt 6x30 ch rs	Boulon 6x30 ch rs	Bolzen 6x30 ch rs	Tornillo 6x30 ch rs
10	25.60311.000	2		Piastrina elastica M6	Spring plate M6	Plaquette élastique M6	Plättchen M6	Pletina elástica M6
11	11.48025.000	4		Bullone M6x16	Bolt M6x16	Boulon M6x16	Bolzen M6x16	Tornillo M6x16
12	C02.06.051.00.00	2		Anello OR	O-Ring	Bague d'étanchéité	O-Ring	Anillo OR
13	28.91943.000	2		Silent block marmitta	Silencer puffer	Silent block silencieux	Silent block Auspuff	Silent block escape
14	026.37.007.82.00	1		Kit revisione silenziatore	Kit for silencer overhauling	Kit rév. Silencieux	Reparatursatz Schalldämpfer	Kit revisión silenciador
15	026.37.016.80.00	1	EU	Collettore di scarico	Exhaust manifold	Collecteur d'échapp.	Abgaskrümmer	Colector de escape
16	026.37.020.82.59	1		Protezione silenziatore	Silencer shield	Protection silencieux	Auspuffverkleidung	Protección escape
17	13.54841.000	1		Distanziale	Spacer	Entretoise	Distanzstück	Distanciador
18	27.42000.000	1		Rondella 6x18	Washer 6x18	Rondelle 6x18	U.Scheibe 6x18	Arandela 6x18

Tav.38

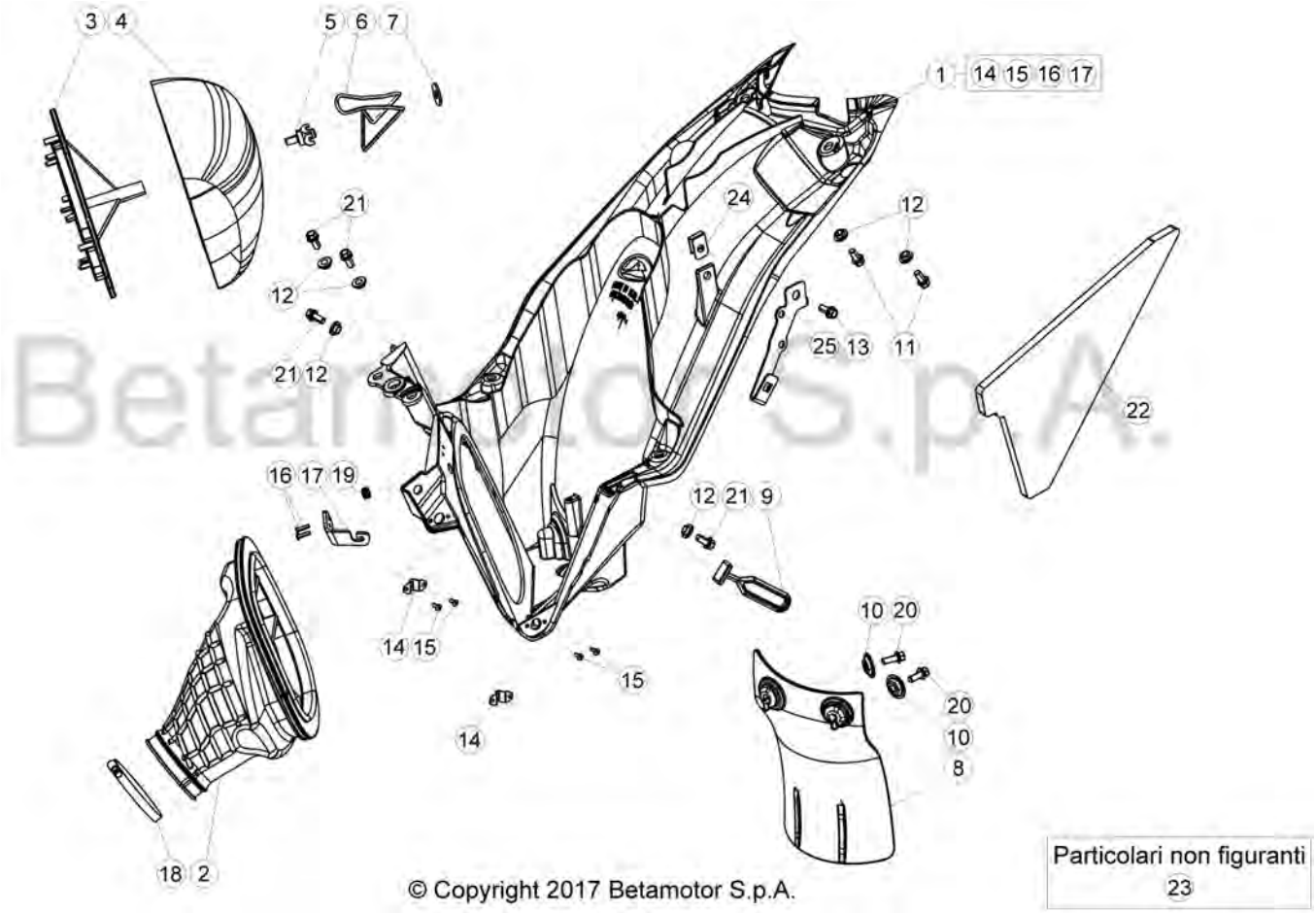

© Copyright 2017 Betamotor S.p.A.

Pos Loc Pos Ps Pos	Numero Number Numéro Número Nummer	Q.tà Q.ty Q.té M.ge C.ad	Nota Note Note Nota Anm.	Descrizione	Description	Désignation	Beschreibung	Descripciòn
1	026.38.012.80.59	1		Scatola filtro completa	Air cleaner box	Boî tier filtre à air	Luftfiltergehä use	Caja filtro de aire
2	026.38.001.00.00	1		Manicotto scatola filtro	Filter box sleeve	Manchon boî te du filtre	Filtergehä usemuffe	Manguito caja filtro
3	026.38.002.00.00	1		Gabbia filtro aria	Filter cage	Grille filtre aire	Filter kafig	Jaula filtro aire
4	031.38.001.00.00	1		Filtro aria	Air filter	Filtre à air	Luftfilter	Filtro de aire
5	25.57197.000	1		Perno richiamo ferma-filtro	Filter pin	Pivot filtre	Filtershalter	Pin Eje filtro
6	020.38.021.00.00	1		Molla fermafiltro	Filter spring	Ressort filtre	Filter Feder	Muelle filtro
7	27.74800.000	1		Rondella autobloccante 9	Washer 9	Rondelle 9	Scheibe 9	Arandela 9
8	026.38.007.10.59	1		Protezione ammortizzatore	Rear damper protection	Protection amortisseur	Stossdä mpferschutz	Protecció n amortiguador
9	16.34907.000	1		Gommino	Rubber buffer	Caoutchouc	Gummi	Goma
10	27.74786.000	2		Rondella bombata	Kasher	Rondelle	Scheibe	Arandela
11	31.79960.000	2		Vite autofilettante M6x15	Self tapping screw M6x15	Vis taraud M6x15	Schraube, Blech M6x15	Tornillo autorrosc. M6x15
12	13.54820.000	6		Distanziale 6,5x9,0x13,5	Spacer 6,5x9,0x13,5	Entretoise 6,5x9,0x13,5	Distanzstü ck 6,5x9,0x13,5	Distanciador 6,5x9,0x13,5
13	11.47015.000	1		Bullone M6x12	Bolt M6x12	Boulon M6x12	Bolzen M6x12	Tornillo M6x12
14	026.38.004.00.00	2		Ricettacolo	Receptacle	Rè ceptacle	Behä lter	Receptaculo
15	C18.19.009.00.00	4		Rivetto a strappo 2,4x8	Rivet 2,4x8	Rivet 2,4x8	Niet 2,4x8	Remache 2,4x8
16	27.33803.000	2		Rivetto a strappo 3,2 acciaio	Rivet 3,2 steel	Rivet 3,2 acier	Niet 3,2 stahl	Remache 3,2 acero
17	020.38.002.00.00	1		Braccetto	Arm	Bras	Kleine Stü tze	Brazo
18	15.14272.000	1		Fascetta raccordo aspirazione	Connecting hose clamp	Collier tuyau d' aspiration	Schelle Schlauchstutzen	Abrazadera tubul. de empalme
19	16.34906.000	1		Gommino	Rubber buffer	Caoutchouc	Gummi	Goma
20	31.30815.000	2		Vite autofilettante 6x20	Self tapping screw 6x20	Vis taraud 6x20	Schraube, Blech 6x20	Tornillo autorrosc. 6x20
21	11.48025.000	4		Bullone 6x16 ch 8 rs	Bolt 6x16 ch 8 rs	Boulon 6x16 ch 8 rs	Bolzen 6x16 ch 8 rs	Tornillo 6x16 ch 8 rs
22	031.38.015.00.00	1		Spugna	Sponge	Eponge	Schwamm	Esponja
23	021.38.019.00.00	1	EU	Filtro aria	Air filter	Filtre à air	Luftfilter	Filtro de aire
24	25.60311.000	1		Piastrina filettata M6	Threaded plate M6	Plaquette filetée M6	Gewindeplatte M6	Placa de tuerca M6
25	031.40.127.22.00	1		Staffa	Bracket	Bride	Befestigung	Brida

Tav.39

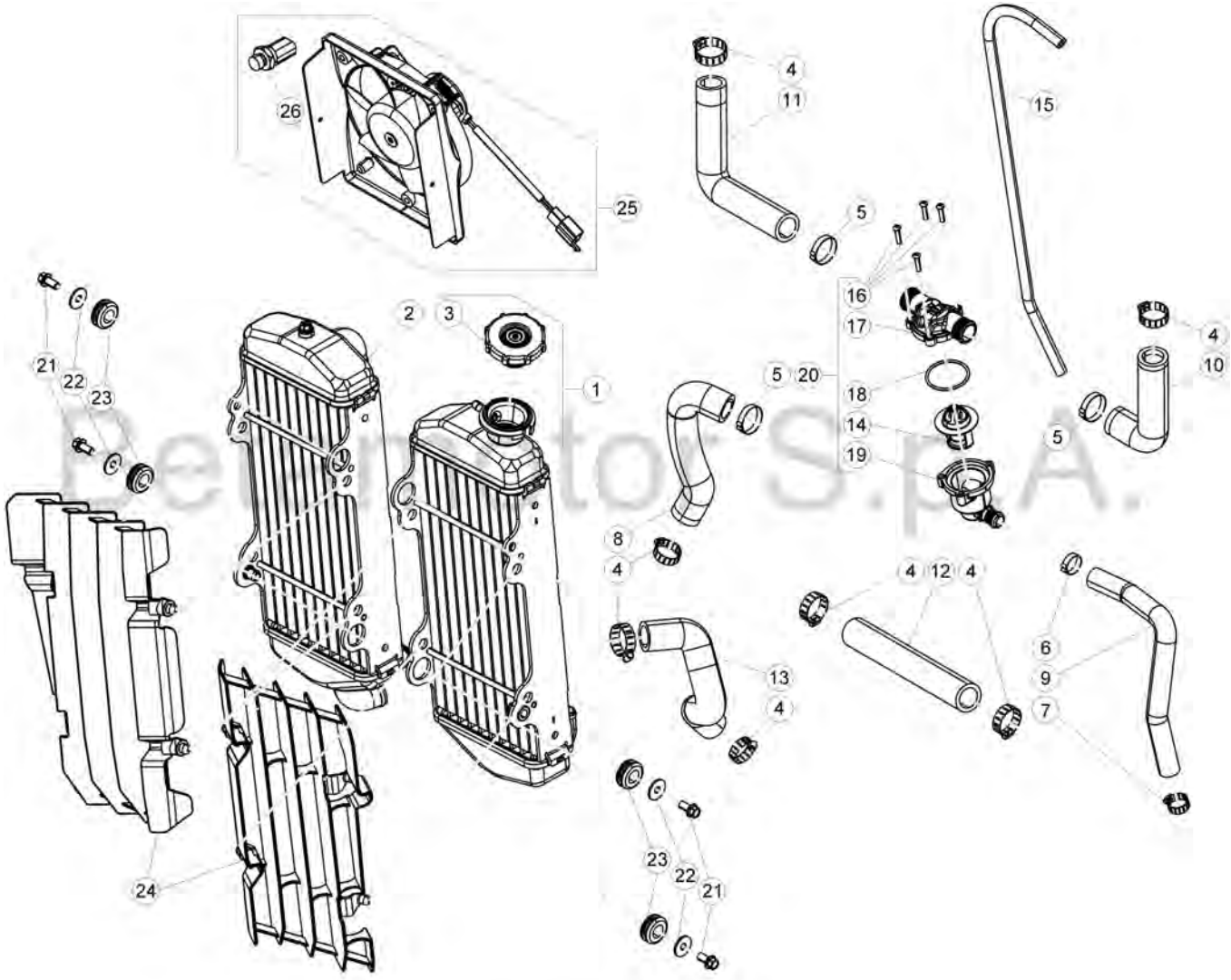

© Copyright 2017 Betamotor S.p.A.

Tav.39

Pos Loc Pos Ps Pos	Numero Number Numéro Número Nummer	Q.tà Q.ty Q.té M.ge C.ad	Nota Note Note Nota Anm.	Descrizione	Description	Désignation	Beschreibung	Descripciòn
1	026.39.010.00.00	1		Radiatore sx	L.H. radiator	Radiateur G.	L., Kühler	Radiador iz.
2	026.39.000.00.00	1		Radiatore dx	R.H. radiator	Radiateur D.	R., Kühler	Radiador der.
3	020.39.111.00.00	1		Tappo radiatore	Radiator plug	Bouchon radiateur	Kühlerdeckel	Tapa de radiador
4	15.15240.000	7		Fascetta 19/28	Clamp 19/28	Collier 19/28	Schelle 19/28	Abrazadera 19/28
5	020.39.008.00.00	3		Fascetta 24	Clamp 24	Collier 24	Schelle 24	Abrazadera 24
6	020.39.009.00.00	1		Fascetta 17	Clamp 17	Collier 17	Schelle 17	Abrazadera 17
7	15.15220.000	1		Fascetta 12/22	Clamp 12/22	Collier 12/22	Schelle 12/22	Abrazadera 12/22
8	026.39.001.00.00	1		Tubo termostato-testa	Thermostat-head pipe	Canalisation thermostat-culasse	Leitung Thermostat-Zylinderkopf	Tubo termostato-culata
9	026.39.002.00.00	1		Tubo inf. Termostato	Thermostat lower hose	Tube inf. interrupteur termique	Thermostatschlauch, unten	Tubo inf. Termostato
10	026.39.022.00.00	1		Tubo termostato sx	L.H. Thermostat hose	Tuyau interr. termique G.	Leitung Thermostat li.	Tubo termostato izq.
11	026.39.021.00.00	1		Tubo termostato dx	R.H. Thermostat hose	Tuyau interr. termique D.	Leitung Thermostat re.	Tubo termostato der.
12	026.39.005.00.00	1		Tubo inferiore radiatori	Lower radiators tube	Tube radiateurs inf.	Wasserschlauch Kühler unten	Tubo radiadores inferior
13	026.39.006.00.00	1		Tubo pompa acqua	Water pump pipe	Tube pompe eau	Leitung wasserpumpe	Tubo bomba agua
14	026.39.013.00.00	1		Termostato	Bimetal, thermostatic	Thérmostat	Thermostat	Termostato
15	026.39.007.00.00	1		Tubo sfiato radiatore	Radiator breather pipe	Tuyau vidange radiateur	Kühlerentlüftungsrohr	Tubo ventilación radiador
16	031.39.017.50.00	4		Vite	Screw	Vis	Schraube	Tornillo
17	031.39.016.00.00	1		Coperchio termostato	Thermostat cover	Couvercle du thermostat	Thermostatabdeckung	Tapa del termostato
18	10.66830.000	1		Anello OR 32.2	Ring OR 32.2	Circlips OR 32.2	Ring OR 32.2	Anillo OR 32.2
19	031.39.015.00.00	1		Contenitore termostato	Thermostat container	Logement interrupteur termique	Rahmen Thermostatschlauch	Plástico termostato
20	026.39.020.80.00	1		Termostato completo	Thermostat, assy	Thermostat complet	Thermostat komplett	Termostato compl.
21	11.47015.000	4		Bullone M6x12	Bolt M6x12	Boulon M6x12	Bolzen M6x12	Tornillo M6x12
22	27.43250.000	4		Rondella 6x24	Washer 6x24	Rondelle 6x24	U.Scheibe 6x24	Arandela 6x24
23	16.34911.000	4		Gommino	Rubber buffer	Caoutchouc	Gummi	Goma
24	031.39.003.00.51	1		Coppia griglie radiatore	Radiator grills	Couples calandres	Kühlergrill	Rejas del radiador
25	026.46.001.82.00	1		Kit elettroventola (opzionale)	Electric fan kit (optional)	Jeu electro-ventilateur (Option)	Elektroluterradsatz (Optionsbaustein)	Kit electroventilador (opcional)
26	026.39.008.00.00	1		Raccordo con termoswitch	Fitting with termoswitch	Raccord avec thermo-régulateur	Stutzen mit Umschalter	Racor con interruptor térmico

GR. COMPONENTI ELETTRICI/CABLAGGI

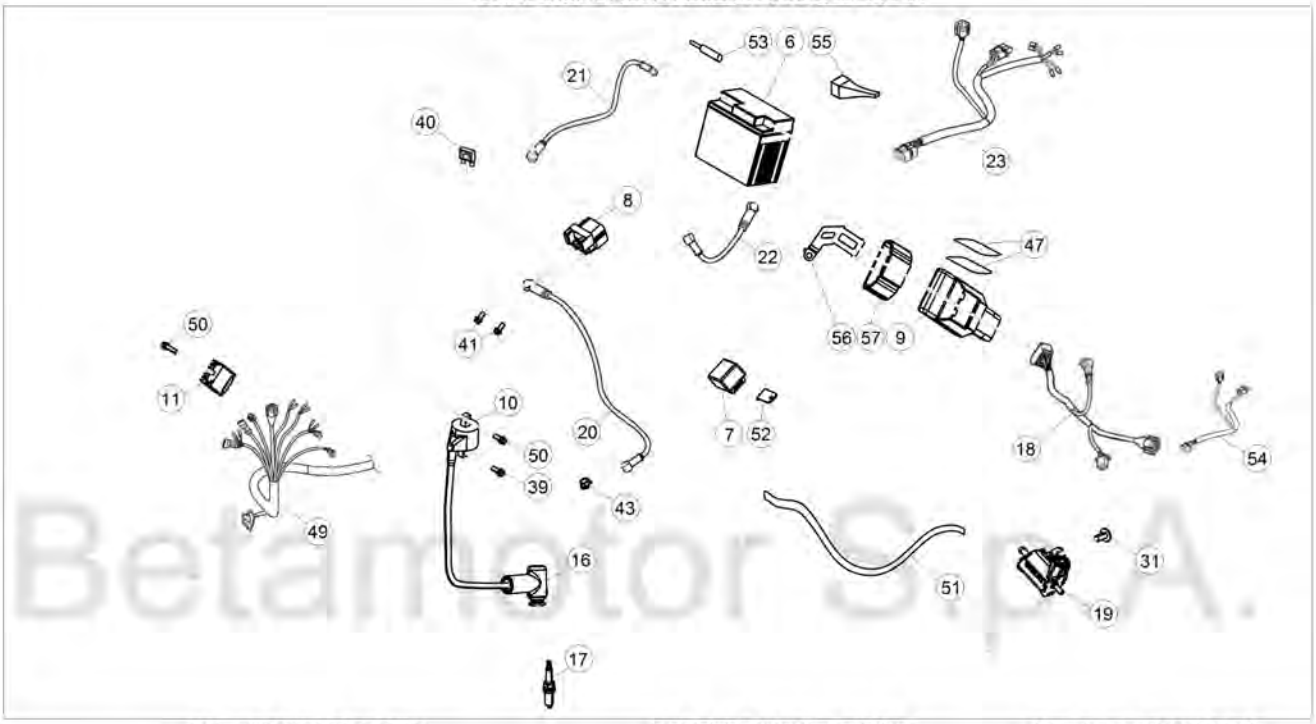

GR. LUCI/INDICATORI

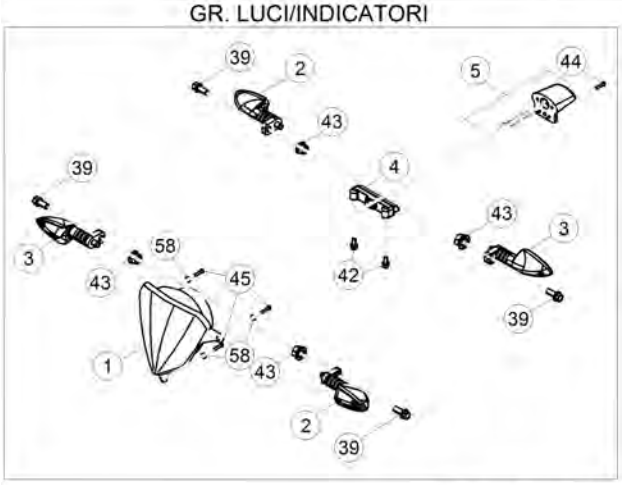

GR. STRUMENTAZIONE

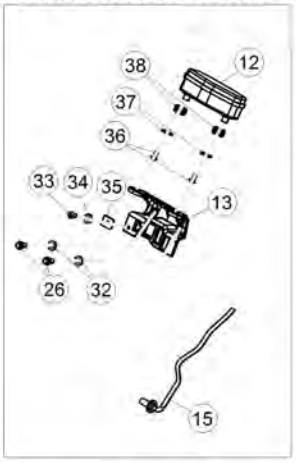

GR. AVV. ACUSTICO

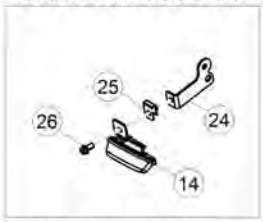

GR. ACCESSORI

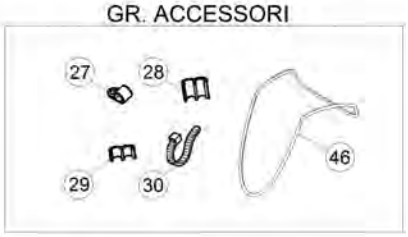

© Copyright 2017 Betamotor S.p.A.

Tav.40

Pos Loc Pos Ps Pos	Numero Number Numéro Número Nummer	Q.tà Q.ty Q.té M.ge C.ad	Nota Note Note Nota Anm.	Descrizione	Description	Désignation	Beschreibung	Descripciòn
1	031.40.006.00.00	1		Gruppo ottico	Semi sealed beam unit	Groupe optique	Scheinwerfer	Grupo óptico
2	020.40.061.00.00	2		Indicatore dir. ant. sx.-post. Dx	Turn signal L.H.front-R.H.rear	Clignotant av.g.-ar.dr.	Blink. Vorderer links-Hinterer rechts	Indicador del. izq.-tras. der.
3	020.40.060.00.00	2		Indicatore dir. ant. dx.-post. Sx	Turn signal R.H.front-L.H.rear	Clignotant av.dr.-ar.g.	Blink.Vorderer rechts-Hinterer links	Indicador del. der.-tras. izq.
4	020.40.030.80.00	1		Fanalino posteriore a led	LED tail lamp	Feu AR. à diodes	LED-Rücklicht	Piloto a LED
5	020.40.020.00.00	1		Luce Targa	Plate Illumination	Éclairage De Plaque	Kennzeichen-Beleuchtung	Ilumnación Placa
6	026.40.048.00.00	1		Batteria	Battery	Batterie	Batterie	Bateria
7	18.84948.000	1		Intermittenza	Unit turn signal lamps	Disp. comm. clignot.	Blinkgeber	Disp. intermitentes
8	27.28471.000	1		Relais	Relay	Relais	Relay	Relé
9	026.40.055.82.00	1	250cc 250RACING	Centralina digitale	CDI unit	Bobine digital (C.D.I.)	Steuergerät	Centralita digital
9	026.40.053.82.00	1	300cc 300RACING	Centralina digitale	CDI unit	Bobine digital (C.D.I.)	Steuergerät	Centralita digital
10	006.40.010.80.00	1		Bobina accensione	Ignition coil	Bobine allumage	Zuendspule	Bobina de encendido
11	27.28101.000	1		Regolatore	Regulator	Régulateur	Regler	Regulador
12	026.40.029.00.00	1		Strumento digitale	Digital instrument	Instrument numérique	Digitalinstrument	Instrumento digital
13	031.40.011.00.00	1		Supporto strumento	Instrument holder	Support instruments	Instrumentenhalter	Soporte instrumentos
14	007.40.050.00.00	1		Avvisatore acustico	Warning horn	Avertisseur sonore	Hupe	Claxon
15	28.79013.000	1		Sensore REED	REED sensor	Sensor REED	Sensor	Sensor REED
16	27.13514.000	1		Raccordo candela	Plug fitting	Raccord bougie	Kerzenanschluß	Racor bujía
17	12.25123.000	1	250cc 250RACING	Candela	Spark.plug	Bougie	Zündkerze	Bujia
17	12.25220.000	1	300cc 300RACING	Candela	Spark.plug	Bougie	Zündkerze	Bujia
18	026.40.058.00.00	1		Impianto elettrico principale	Main electric wiring	Câblage électrique principale	Hauptelektroverkabelung	Cableado eléctrico principal
19	026.40.017.00.00	1	250-300cc	Pompa olio	Oil pump	Pompe huile	Ölpumpe	Bomba aceite
20	026.40.006.00.00	1		Cavetto relè avviamento	Starter relay cable	Câble relais de demarrage	Anlassrelaiskabel	Cable relé de arranque
21	020.40.002.00.00	1		Cavetto di massa	Ground cable	Cable masse	Masse kabel	Cable masa
22	020.40.003.00.00	1		Cavo batteria-relè	Battery-Relay cable	Cable batterie-realis	Kabel Batterie-Relais	Cable Baterí a-Relé
23	031.40.042.00.00	1		Impianto posteriore	Rear harness	Circuit post.	Anlage hinten	Instalación tras.
24	28.97255.000	1		Staffa supporto avvisatore acustico	Horn support bracket	Bride support avertisseur	Hupebefestigung	Brida soporte claxon
25	25.60311.000	1		Piastrina elastica M6	Spring plate M6	Plaquette élastique M6	Plättchen M6	Pletina elástica M6
26	11.47015.000	3		Bullone M6x12	Bolt M6x12	Boulon M6x12	Bolzen M6x12	Tornillo M6x12
27	15.14654.000	1		Fascetta	Clamp	Collier	Schelle	Abrazadera
28	25.24442.000	3		Passacavo 6/8	Fair lead 6/8	Passe-fils 6/8	Kabelführung 6/8	Pasa-cable 6/8
29	25.24443.000	3		Passacavo 6/6	Fair lead 6/6	Passe-fils 6/6	Kabelführung 6/6	Pasa-cable 6/6
30	15.14264.000	4		Fascetta	Clamp	Collier	Schelle	Abrazadera
31	31.95510.000	1	250-300cc	Vite TBCE M6x12	Screw TBCE M6x12	Vis TBCE M6x12	Schraube TBCE M6x12	Tornillo TBCE M6x12
32	13.54820.000	2		Distanziale 6,5x9,0x13,5	Spacer 6,5x9,0x13,5	Entretoise 6,5x9,0x13,5	Distanzstück 6,5x9,0x13,5	Distanciador 6,5x9,0x13,5
33	31.23530.000	1		Vite M4,2x16 TMTIC autofilettante	Self tapping screw M4,2x13 TMTIC	Vis taraud M4,2x13 TMTIC	Schraube Blech M4,2x13 TMTIC	Tornillo M4,2x13 TMTIC autorroscante
34	27.34800.000	1		Rondella grower 4x16	Grower washer 4x16	Rondelle Grower 4x16	Federring Grower 4x16	Arandela elástica Grower 4x16
35	25.58090.000	1		Piastrina elastica	Spring plate	Plaquette élastique	Plättchen	Pletina elástica
36	31.26190.000	2		Vite M4x12 TCIC	Screw M4x12 TCIC	Vis M4x12 TCIC	Schraube M4x12 TCIC	Tornillo M4x12 TCIC
37	020.40.812.00.00	2		Distanziale 5x15	Spacer 5x15	Entretoise 5x15	Distanzstück 5x15	Distanciador 5x15
38	031.40.013.00.00	2		Gommino	Rubber buffer	Caoutchouc	Gummi	Goma
39	11.48025.000	5		Bullone 6x16 ch 8 rs	Bolt 6x16 ch 8 rs	Boulon 6x16 ch 8 rs	Bolzen 6x16 ch 8 rs	Tornillo 6x16 ch 8 rs
40	020.40.006.00.00	2		Fusibile 10A	Fuse 10A	Fusible 10A	Sicherung 10A	Fusible 10A
41	31.30190.000	2		Vite a brugola 6x8	Allen screw 6x8	Vis à 6 pans 6x8	Sechskantschraube 6x8	Tornillo a llave allen 6x8
42	11.46251.000	2		Bullone flangiato M5x12	Head Flanged bolt M5x12	Boulon Bridé M5x12	Bundbolzen M5x12	Bulón con Brida M5x12
43	13.12550.000	5		Dado flangiato M6	Flanged nut M6	Ecrou bordé M6	Flanschmutter M6	Tuerca embridada M6
44	31.23565.000	1		Vite 4,5x15 TCCCR	Screw 4,5x15 TCCCR	Vis 4,5x15 TCCCR	Schraube 4,5x15 TCCCR	Tornillo 4,5x15 TCCCR
45	31.26190.000	3		Vite M4x12 TCIC	Screw M4x12 TCIC	Vis M4x12 TCIC	Schraube M4x12 TCIC	Tornillo M4x12 TCIC
46	14.40020.000	1		Elastico fissaggio batteria	Battery elastic strap	Sangle batterie	Gummiband Batteriebefestigung	Elástico sujeta baterí a
47	29.10317.000	2		Tampone	Buffer	Silentbloc	Puffer	Silent-block
49	026.40.038.00.00	1		Impianto elettrico servizi anteriore	Front services electrical wiring	Câblage services avant	Elektrische Verkabelung Verbaucher vorne	Cableado eléctrico de los servicios delantero
50	11.49070.000	2		Bullone 6x20 ch rs	Bolt 6x20 ch rs	Boulon 6x20 ch rs	Bolzen 6x20 ch rs	Tornillo 6x20 ch rs
51	026.43.027.00.00	1	250-300cc	Tubo olio	Oil tube	Tuyau huile	Schlauch	Tubo aceite
52	031.40.002.22.00	1		Piastrina per intermittenza	Plate (flash device)	Plaque intermittence	Platte Blinkgeber	Placa intermitencia
53	031.40.051.00.00	1		Condensatore	Condenser	Condensateur	Kondensator	Condensador
54	026.40.057.00.00	1		Impianto elettrico diagnosi	Diagnosys wiring	Câblage pour diagnosis	Diagnosys Kabelbaum	Cableado diagnosi
55	031.40.052.00.00	1		Gruppo diodi	Diode gr.	Groupe diodes	Diodeneinheit	Grupo diodos
56	026.40.052.22.00	1		Staffa centralina	CDI support	Support centrale digital	Haltebügel für Steuergerät	Soporte centralita
57	007.40.081.00.00	1		Elastico centralina	CDI elastic rubber	Elastique de fix. centrale digital	Befestigungsband für Steuergerät	Elastico centralita
58	27.34650.000	3		Rondella 4.9	Washer 4.9	Rondelle 4.9	U.Scheibe 4.9	Arandela 4.9

Tav.41

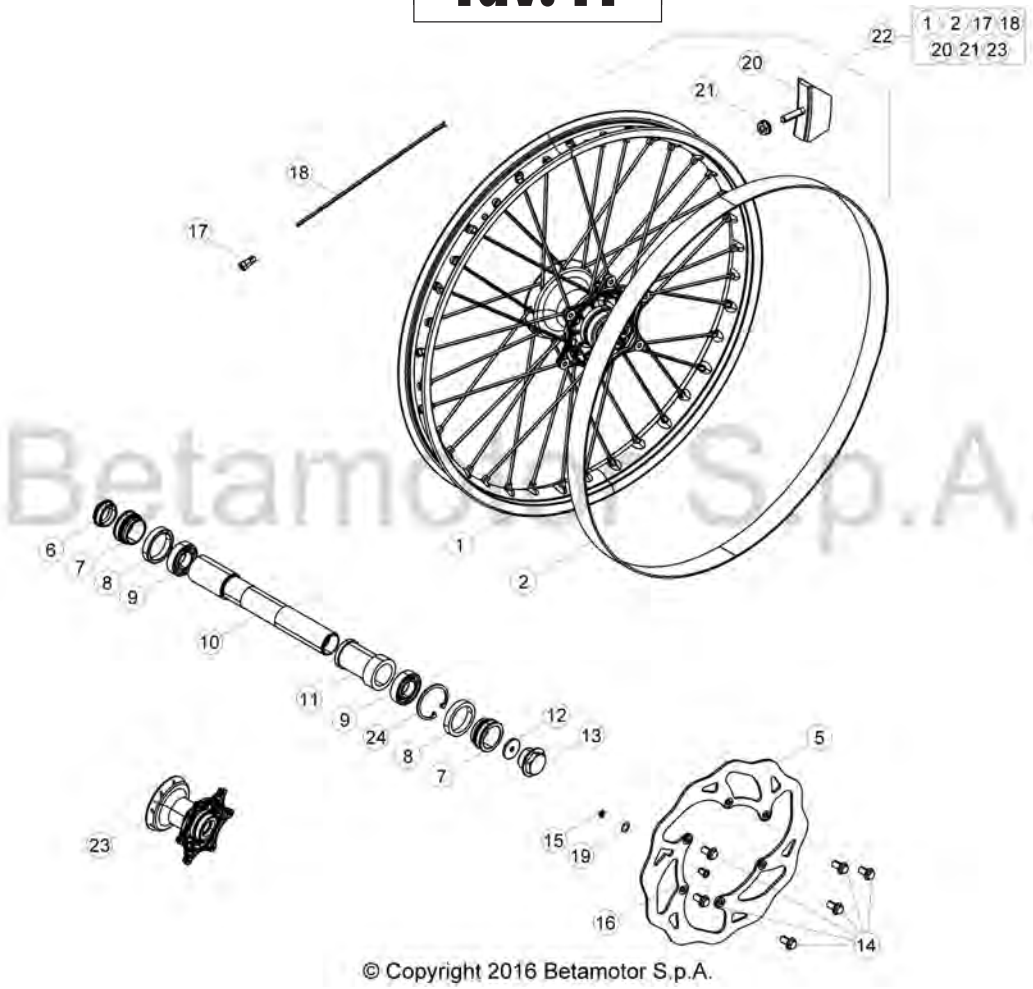

Betamotor S.p.A.
© Copyright 2016 Betamotor S.p.A.

Pos Loc Pos Ps Pos	Numero Number Numéro Número Nummer	Q.tà Q.ty Q.té M.ge C.ad	Nota Note Note Nota Anm.	Descrizione	Description	Désignation	Beschreibung	Descripciòn
1	031.41.046.00.59	1		Cerchio anteriore	Front rim	Jante avant	Vorderfelge	Llanta delantera
2	15.38200.000	1		Flap 21x25	Bead 21x25	Flap21x25	Felgenband 21x25	Flap cinta tapa radios 21.25
5	031.41.030.00.00	1		Disco freno	Brake plate	Disque frein	Bremscheibe	Disco freno
6	020.41.007.00.00	1		Tappo perno ruota anteriore	Front wheel pin plug	Bouchon pivot roue avant	Stopfen Pin Vorrad	Tapon eje rueda anterior
6	026.41.002.00.00	1	RACING	Tappo perno ruota anteriore	Front wheel pin plug	Bouchon pivot roue avant	Stopfen Pin Vorrad	Tapon eje rueda anterior
7	031.41.004.00.00	2		Distanziale ant.	Front spacer	Entretoise AV.	Distanzstück vorderer	Distanciador del.
8	10.66000.000	2		Paraolio 35x47x7	Oil seal 35x47x7	Pare-huile 35x47x7	Dichtring 35x47x7	Sello de lub. 35x47x7
9	020.41.003.00.00	2		Cuscinetto 30x47x9	Bearing 30x47x9	Roulement 30x47x9	Lager 30x47x9	Cojinete 30x47x9
10	020.41.005.00.00	1		Perno ruota anteriore	Front wheel spindle	Pivot roue AV.	Vorderradzapfen	Perno rueda delantera
11	031.41.015.00.00	1		Distanziale interno	Inner spacer	Entretoise interne	Inneres Distanzstück	Distanciador interior
12	020.41.110.00.00	1		Tappo interno perno ruota anteriore	Front wheel pin inner plug	Bouchon int. pivot roue avant	Innerstopfen Pin Vorrad	Tapon int. eje rueda anterior
13	020.41.006.00.00	1		Tappo filettato	Threaded plug	Bouchon fileté	Gewindepfropf	Tapòn filete
14	031.41.016.00.00	6		Vite TEF M6x14	Screw TEF M6x14	Vis TEF M6x14	Schraube TEF M6x14	Tornillo TEF M6x14
15	28.22660.000	1		Seeger 9E	Circlip 9E	Circlip 9E	Seeger 9E	Seeger 9E
16	021.41.005.00.00	1		Magnete	Magneto	Magneto	Magnet	Magneto
17	031.41.050.00.00	36		Nipplo	Nipple	Ecrou	Nippel	Tuerca
18	031.41.049.00.52	36		Raggio	Spoke	Rayon	Speiche	Radio
19	27.58080.000	1		Rondella spess. 9x13x0,4	Washer 9x13x0,4	Rondelle epaisseur 9x13x0,4	Scheibe 9x13x0,4	Arandela 9x13x0,4
20	036.41.010.00.00	1		Fermacopertone	Tyre retainer	Arrêt pneu	Felgenhalterung	Sujeta cobertura
21	13.17120.000	1		Dado M8 flangiato	Nut M8	Ecrou M8	Mutter M8	Tuerca M8
22	026.41.001.00.59	1		Ruota anteriore p/montata	Fr. wheel assy.	Roue AV. p/monte'	Vormontiertes Vorderrad	Rueda delantera montada
23	031.41.014.80.00	1		Mozzo anteriore c/cuscinetti	Front hub with ballbearing	Moyeu avant avec roulements	Nabe vo.	Buje ant.c/cojinetes
24	C01.26.001.00.00	1		Seeger 47x1,75	Circlip 47x1,75	Circlip 47x1,75	Seeger 47x1,75	Seeger 47x1,75

Tav.42

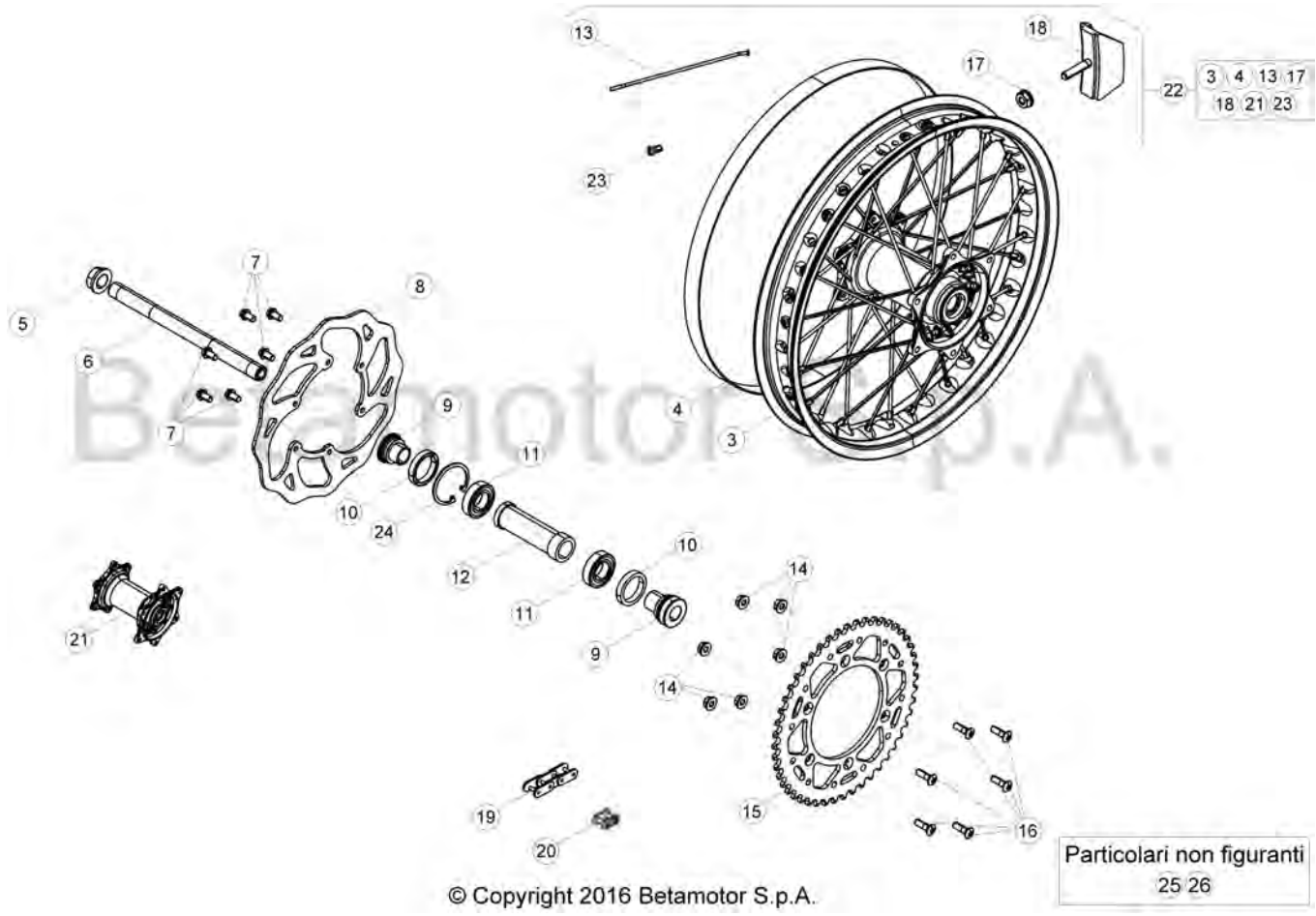

Pos Loc Pos Ps Pos	Numero Number Numéro Número Nummer	Q.tà Q.ty Q.té M.ge C.ad	Nota Note Note Nota Anm.	Descrizione	Description	Désignation	Beschreibung	Descripciòn
3	031.42.034.00.59	1		Cerchio ruota posteriore	Rear wheel rim	Janta roue AR.	Hinterradfelge	Llanta rueda trasera
4	15.36000.000	1		Flap 17/18x25	Bead 17/18x25	Flap 17/18x25	Felgenband 17/18x25	Flap cinta tapa radios 17/18x25
5	13.27120.000	1		Dado speciale	Special nut	Ecrou spé ciale	Spezialmutter	Tuerca especial
6	25.55812.000	1		Perno ruota posteriore	Rear wheel pin	Pivot roue arriè re	Hinterradbolzen	Perno rueda trasera
7	031.41.016.00.00	6		Vite TEF M6x14	Screw TEF M6x14	Vis TEF M6x14	Schraube TEF M6x14	Tornillo TEF M6x14
8	031.42.030.00.00	1		Disco freno posteriore	Rear brake disk	Disque frein arriè re	Hinterbremsscheibe	Disco freno trasero
9	031.42.002.00.00	2		Distanziale mozzo post. Dx	RH rear hub spacer	Entretoise moyeu arriere D.	Distanz li	Distanciador buje tras. Der.
10	10.66000.000	2		Paraolio 35x47x7	Oil seal 35x47x7	Pare-huile 35x47x7	Dichtring 35x47x7	Sello de lub. 35x47x7
11	020.42.004.00.00	2		Cuscinetto 25x47x12	Bearing 25x47x12	Roulement 25x47x12	Lager 25x47x12	Cojinete 25x47x12
12	031.42.005.00.00	1		Distanziale interno	Inner spacer	Entretoise interne	Inneres Distanzstü ck	Distanciador interior
13	031.42.037.00.52	36		Raggio ruota posteriore	Rear wheel spokes	Rayons roue AR.	Hinterradspeiken	Radios rueda trasera
14	13.17123.000	6		Dado TECF M8	Nut TECF M8	Ecrou TECF M8	Mutter TECF M8	Tuerca TECF M8
15	026.42.005.00.00	1	250cc	Corona Z49	Ring gear Z49	Couronne Z49	Zahnkranz Z49	Corona Z49
15	026.42.007.00.00	1	250RACING	Corona Z49	Ring gear Z49	Couronne Z49	Zahnkranz Z49	Corona Z49
15	031.42.038.00.00	1	300cc	Corona Z48	Ring gear Z48	Couronne Z48	Zahnkranz Z48	Corona Z48
15	031.42.046.00.00	1	300RACING	Corona Z48	Ring gear Z48	Couronne Z48	Zahnkranz Z48	Corona Z48
16	31.96827.000	6		Vite speciale M8X26	Special screw M8X26	Vis spé ciale M8X26	Spezialschraube M8X26	Tornillo especial M8X26
17	13.17120.000	1		Dado M8 flangiato	Nut M8	Ecrou M8	Mutter M8	Tuerca M8
18	036.42.009.00.00	1		Fermacopertone	Tire fastener	Caoutchouc serrure chambre	Reifen Halter	Agarre cubierta ant.
19	031.42.003.00.00	1		Catena P114	Chain P114	Chaî ne P114	Kette P114	Cadena P114
20	031.42.008.00.00	1		Maglia congiunzione 5/8x1/4	Connecting link 5/8x1/4	Maillon jonction 5/8x1/4	Kettenschloss 5/8x1/4	Enganche cadena 5/8x1/4
21	031.42.014.80.00	1		Mozzo posteriore c/cuscinetti	Rear hub with ballbearing	Moyeu arriere avec roulements	Hinterrad Nabe	Buje del. c/cojinetes
22	026.42.008.00.59	1		Ruota posteriore p/montata	Front wheel assy.	Roue arriere p/monte'	Vormontiertes hinterrad	Rueda trasera montada
23	031.42.051.00.00	36		Nipplo	Nipple	Ecrou	Nippel	Tuerca
24	C01.26.001.00.00	1		Seeger 47x1,75	Circlip 47x1,75	Circlip 47x1,75	Seeger 47x1,75	Seeger 47x1,75
25	026.42.013.00.00	1	EU	Corona Z42	Ring gear Z42	Couronne Z42	Zahnkranz Z42	Corona Z42
26	026.42.014.00.00	1	EU	Catena 5/8x 1 1/4 P110	Chain 5/8x 1 1/4 P110	Chaî ne 5/8x 1 1/4 P110	Kette 5/8x 1 1/4 P110	Cadena 5/8x 1 1/4 P110

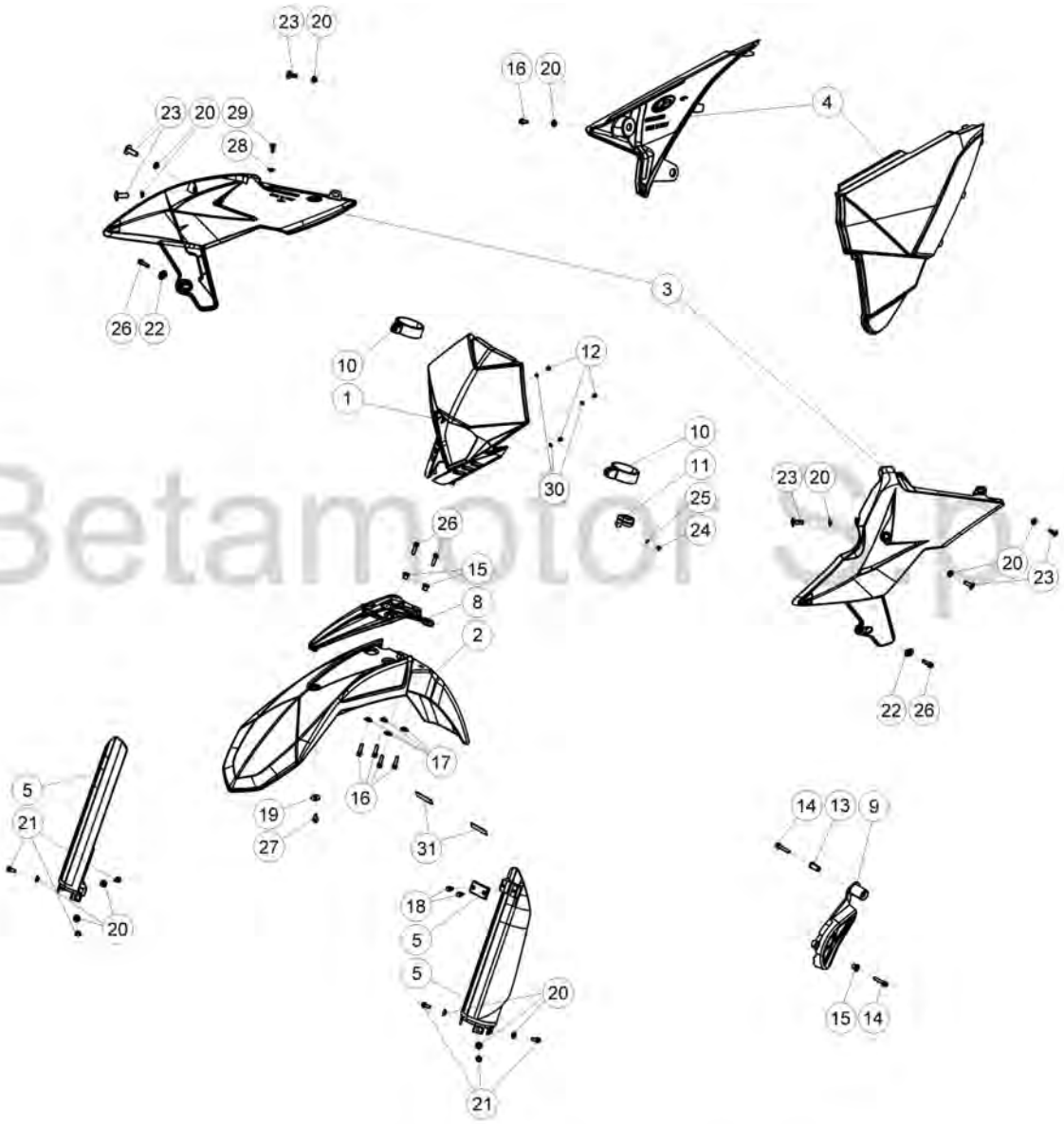

Betamotor S.p.A.

© Copyright 2017 Betamotor S.p.A.

Tav.43A

Pos Loc Pos Ps Pos	Numero Number Numéro Número Nummer	Q.tà Q.ty Q.té M.ge C.ad	Nota Note Note Nota Anm.	Descrizione	Description	Désignation	Beschreibung	Descripciòn
1	020.43.015.00.51	1		Mascherina	Mask	Masque	Maske	Máscara
2	031.43.034.10.51	1		Parafango	Mudguard	Garde -boue	Kotflügel	Guardabarros
3	031.43.140.00.51	1		Fianchetti serbatoio	Tank panels	Panneaux laterales	Benzintankseiten	Flancos
4	026.43.021.00.51	1		Coppia fianchetti scatola filtro	Airbox panels, pair	Couple cote lat. boîtier filtre à air	Luftfiltergehäuseseiten	Flancos derechos caja filtro aire
5	026.45.113.82.51	1		Protezioni stelo-Kit	Fork tube protections-Kit	Jeu protections tube fourche	Kit Abdeckung Gabelschlauch	Juego protecciónes tubos horquilla
8	020.43.141.10.59	1		Supporto parafango	Fender stay	Appui aile	Kotfluegelstuetze	Soporte de guardabarros
9	020.43.062.10.59	1		Coperchio pignone	Sprocket cover	Couvercle pignon	Deckel Ritzel	Tapa piñón
10	14.40081.000	2		Elastico fissaggio mascherina	Headlight holder elastic rubber	Elastique de fixage cache phare	Befestigungsband Lichtschildchen	Elastico
11	25.24464.000	1		Passacavo	Grommet	Passe-câble	Kabeldurchgang	Pasacables
12	31.26190.000	3		Vite M4x12 TCIC	Screw M4x12 TCIC	Vis M4x12 TCIC	Schraube M4x12 TCIC	Tornillo M4x12 TCIC
13	13.49189.000	1		Distanziale	Spacer	Entretoise	Distanzstück	Distanciador
14	11.50300.000	2		Bullone 6x30 ch rs	Bolt 6x30 ch rs	Boulon 6x30 ch rs	Bolzen 6x30 ch rs	Tornillo 6x30 ch rs
15	13.49190.000	3		Distanziale 10mm	Spacer 10mm	Entretoise 10mm	Distanzstück 10mm	Distanciador 10mm
16	11.48025.000	5		Bullone 6x16 ch 8 rs	Bolt 6x16 ch 8 rs	Boulon 6x16 ch 8 rs	Bolzen 6x16 ch 8 rs	Tornillo 6x16 ch 8 rs
17	13.54841.000	4		Distanziale	Spacer	Entretoise	Distanzstück	Distanciador
18	31.79960.000	2		Vite autofilettante M6x15	Self tapping screw M6x15	Vis taraud M6x15	Schraube, Blech M6x15	Tornillo autorrosc. M6x15
19	27.74786.000	1		Rondella	Washer	Rondelle	U.Scheibe	Arandela
20	13.54820.000	13		Distanziale 6,5x9,0x13,5	Spacer 6,5x9,0x13,5	Entretoise 6,5x9,0x13,5	Distanzstück 6,5x9,0x13,5	Distanciador 6,5x9,0x13,5
21	11.47015.000	6		Bullone M6x12	Bolt M6x12	Boulon M6x12	Bolzen M6x12	Tornillo M6x12
22	020.43.012.00.00	2		Distanziale	Spacer	Entretoise	Distanzstück	Distanciador
23	31.95510.000	6		Vite TBCE M6x12	Screw TBCE M6x12	Vis TBCE M6x12	Schraube TBCE M6x12	Tornillo TBCE M6x12
24	31.23360.000	1		Vite autofilettante 4x10	Self tapping screw 4x10	Vis taraud 4x10	Schraube, Blech 4x10	Tornillo autorrosc. 4x10
25	27.34650.000	1		Rondella	Washer	Rondelle	U.Scheibe	Arandela
26	11.49070.000	4		Bullone 6x20 ch rs	Bolt 6x20 ch rs	Boulon 6x20 ch rs	Bolzen 6x20 ch rs	Tornillo 6x20 ch rs
27	11.46501.000	1		Bullone M6x10	Bolt M6x10	Boulon M6x10	Bolzen M6x10	Tornillo M6x10
28	13.62000.000	1		Distanziale	Spacer	Entretoise	Distanzstück	Distanciador
29	31.30035.000	1		Bullone M6x25 TBCEI	Bolt M6x25 TBCEI	Boulon M6x25 TBCEI	Bolzen M6x25 TBCEI	Tornillo M6x25 TBCEI
30	27.34650.000	3		Rondella 4.9	Washer 4.9	Rondelle 4.9	U.Scheibe 4.9	Arandela 4.9
31	12.33062.000	2	EU	Catadiottro laterale	Side reflector	Catadioptre latéral	Seiten Rückstrahler	Catafaro lateral

Tav.43B

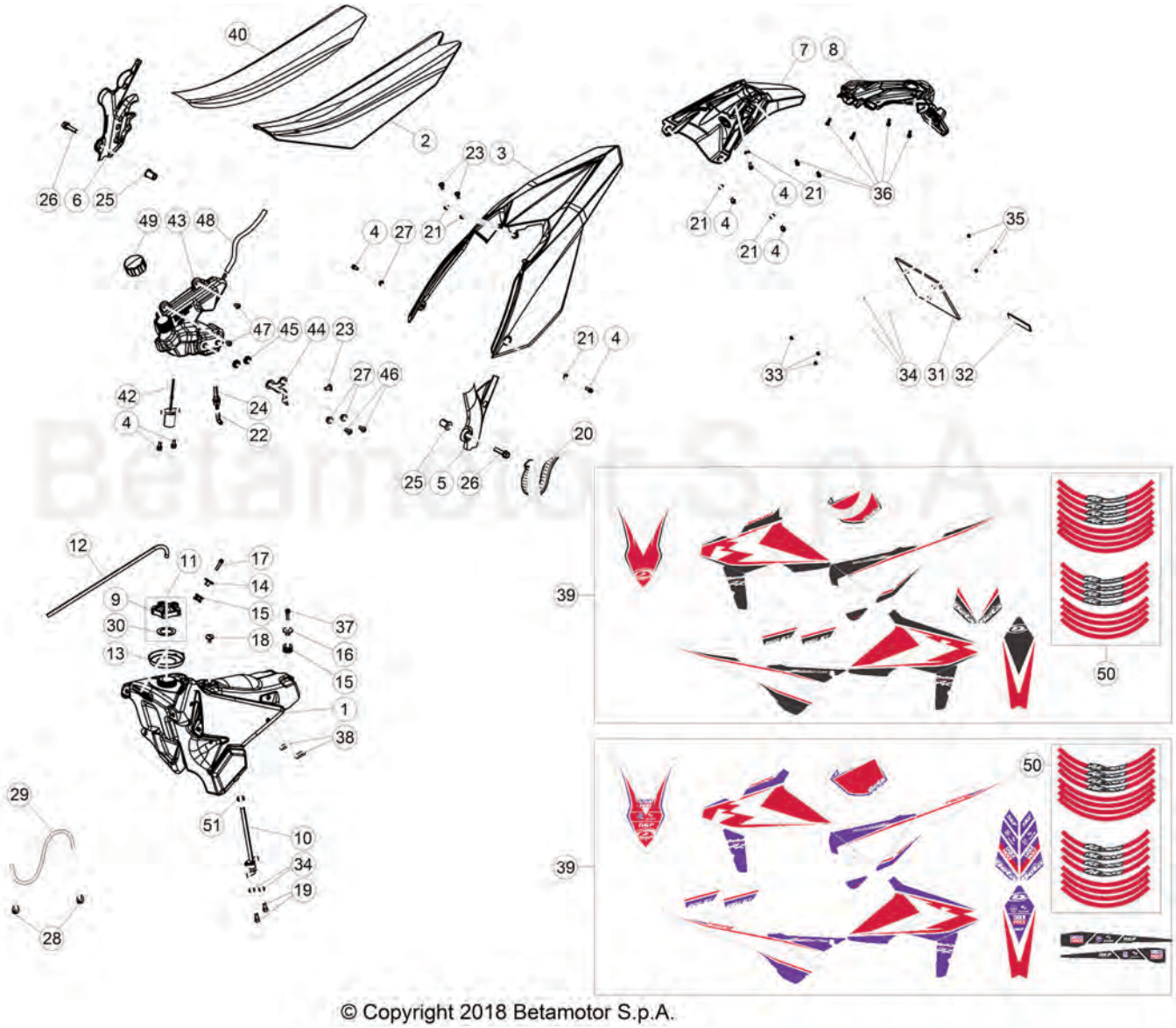

© Copyright 2018 Betamotor S.p.A.

Tav.43B

Pos Loc Pos Ps Pos	Numero Number Numéro Número Nummer	Q.tà Q.ty Q.té M.ge C.ad	Nota Note Note Nota Anm.	Descrizione	Description	Désignation	Beschreibung	Descripciòn
1	026.43.006.10.51	1		Serbatoio benzina	Fuel tank	Reservoir carb.	Kraftstofftank	Dep. carburante
2	031.43.143.00.00	1		Sella	Seat	Siege	Sattel	Sillin
2	031.43.063.00.00	1	RACING	Sella	Seat	Siege	Sattel	Sillin
3	026.43.033.00.51	1		Parafango posteriore	Rear mudguard	Garde-boue AR.	Hinterradkotflügel	Guardabarros tras.
4	11.48025.000	7		Bullone 6x16 ch 8 rs	Bolt 6x16 ch 8 rs	Boulon 6x16 ch 8 rs	Bolzen 6x16 ch 8 rs	Tornillo 6x16 ch 8 rs
4	11.48025.000	5	RACING	Bullone 6x16 ch 8 rs	Bolt 6x16 ch 8 rs	Boulon 6x16 ch 8 rs	Bolzen 6x16 ch 8 rs	Tornillo 6x16 ch 8 rs
5	020.43.060.10.59	1		Protezione telaio Sx	L.H. frame guard	Protection chassis G.	Rahmenschutz Links	Protecciòn bastidor izquierda
6	020.43.061.10.59	1		Protezione telaio Dx	R.H. frame guard	Protection chassis D.	Rahmenschutz Rechts	Protecciòn bastidor derecha
7	036.43.006.10.59	1		Portatarga	Plate holder	Porte-plaque	Kennzeichenträger	Porta matr.
8	020.43.034.10.59	1	EU	Portatarga	Plate holder	Porte-plaque	Kennzeichenträger	Porta matr.
9	036.43.041.80.00	1		Tappo serbatoio	Filler cap	Bouchon de réservoir	Tankverschluss	Tapón depósito
10	020.43.007.00.00	1		Rubinetto benzina	Fuel cock.	Robinet melange	Kraftstoffhahn	Grifo mezcla
11	036.43.041.82.00	1		Tappo serbatoio benzina compl.	Tank cap assy.	Bouchon de réservoir complet	Tankverschluss kpl.	Tapón depósito completo
12	021.43.006.00.00	1		Tubo sfiato	Bleeder pipe	Tuyau purge	Leitung Entlueftungsventil	Tubo purga de aire
13	026.43.029.00.00	1	EU	Anello	O-Ring	Bague d'étanchéité	O-Ring	Anillo
14	020.43.002.00.00	1		Distanziale serbatoio benzina	Fuel tank spacer	Entretoise réservoir carburant	Distanz Benzintank	Distanciador depósito gasolina
15	28.91946.000	2		Silentbloc	Silentbloc	Silentbloc	Puffer	Silent-block
16	031.43.002.00.00	1		Distanziale	Spacer	Entretoise	Distanzstück	Distanciador
17	11.50010.000	1		Bullone M6x25	Bolt M6x25	Boulon M6x25	Bolzen M6x25	Tornillo M6x25
18	31.89010.000	1		Vite spec. bloccaggio sella	Seat locking screw	Vis bloccage selle	Schraube	Tornillo bloqueo sillin
19	31.29810.000	2		Vite 5x12	Screw 5x12	Vis 5x12	Schraube 5x12	Tornillo 5x12
20	15.14264.000	1		Fascetta	Clamp	Collier	Schelle	Abrazadera
21	13.54820.000	6		Distanziale 6,5x9,0x13,5	Spacer 6,5x9,0x13,5	Entretoise 6,5x9,0x13,5	Distanzstück 6,5x9,0x13,5	Distanciador 6,5x9,0x13,5
22	036.43.022.00.00	1	250-300cc	Tubo olio	Oil tube	Tuyau huile	Schlauch	Tubo aceite
23	31.95510.000	3		Vite TBCE M6x12	Screw TBCE M6x12	Vis TBCE M6x12	Schraube TBCE M6x12	Tornillo TBCE M6x12
23	31.95510.000	2	RACING	Vite TBCE M6x12	Screw TBCE M6x12	Vis TBCE M6x12	Schraube TBCE M6x12	Tornillo TBCE M6x12
24	036.43.017.00.00	1	250-300cc	Raccordo	Joint.p.	Raccord	Stutzen	Racor
25	27.33740.000	2		Rivetto filettato M6	Threaded rivet M6	Rivet fileté M6	Niete mit gewinde M6	Remache roscado M6
26	11.49070.000	2		Bullone 6x20 ch rs	Bolt 6x20 ch rs	Boulon 6x20 ch rs	Bolzen 6x20 ch rs	Tornillo 6x20 ch rs
27	13.62000.000	3		Distanziale	Spacer	Entretoise	Distanzstück	Distanciador
27	13.62000.000	1	RACING	Distanziale	Spacer	Entretoise	Distanzstück	Distanciador
28	C07.08.008.00.00	2		Anello stringitubo CE12	Pipe clamping ring CE12	Anneau serre-tube CE12	Schlauchschelle CE12	Anillo prensatubo CE12
29	026.43.005.00.00	1		Tubo serbatoio-carburatore	Tank-carburettor pipe	Tuyau réservoir-carburateur	Tankleitung-Vergaser	Tubo radiador-carburador
30	031.43.116.00.00	1		Guarnizione tappo	Packing for cap	Joint bouchon	Deckeldichtung	Junta tapón
31	018.43.010.10.59	1	EU	Supporto targa	Licence plate bracket	Support plaque	Nummernschildträger	Soporte placa porta matrícula
32	12.33086.000	1	EU	Catadiottro posteriore	Rear reflector	Catadioptre AR.	Rückstrahler hinten	Catafaro tras.
33	13.11010.000	3	EU	Dado autobloccante M5	Self locking nut M5	Ecrou de sécurité M5	Mutter, selbstsichernd M5	Tuerca de seguridad M5
34	27.36000.000	5	EU	Rondella 5x11	Washer 5x11	Rondelle 5x11	U.Scheibe 5x11	Arandela 5x11
35	31.29860.000	3	EU	Vite M5x16 TTLIC	Screw M5x16 TTLIC	Vis M5x16 TTLIC	Schraube M5x16 TTLIC	Tornillo M5x16 TTLIC
36	31.79960.000	6	EU	Vite autofilettante M6x15	Self tapping screw M6x15	Vis taraud M6x15	Schraube, Blech M6x15	Tornillo autorrosc. M6x15
37	11.50300.000	1		Bullone 6x30 ch rs	Bolt 6x30 ch rs	Boulon 6x30 ch rs	Bolzen 6x30 ch rs	Tornillo 6x30 ch rs
38	031.43.004.82.00	2		Tampone serbatoio	Tank buffer	Silentbloc réservoir	Puffer tank	Silent-block deposito
39	031.43.164.82.00	1		Decalco serie completa	Transfer set	Série Décalcomanie	Serie Abziehbild	Seire Calcomaní as
39	031.43.166.82.00	1	RACING	Decalco serie completa	Transfer set	Série Décalcomanie	Serie Abziehbild	Seire Calcomaní as
40	031.43.144.00.00	1		Copertura sella	Saddle cover	Hous. de selle	Abdeckung	Cubierta sillin
40	031.43.064.00.00	1	RACING	Copertura sella	Saddle cover	Hous. de selle	Abdeckung	Cubierta sillin
42	026.40.019.00.00	1	250-300cc	Indicatore di livello	Fuel level gauge	Jauge d'essence	Benzinstandgeber	Indicador de nivel
43	026.43.007.10.51	1	250-300cc	Serbatoio olio mix	Oil mix tank	Réservoir d'huile mix	2-taktöltank	Tanque aceite mezcla
44	036.43.021.22.00	1	250-300cc	Attacco pompa olio	Oil pump element	Element pompe huile	Ölpumpeneinsatz	Elemento de bomba aceite
45	28.91880.000	2	250-300cc	Silent block	Silentbloc	Silent block	Puffer	Silent block
46	31.30470.000	2	250-300cc	Vite 6x14 TBCE	Screw 6x14 TBCE	Vis 6x14 TBCE	Schraube 6x14 TBCE	Tornillo 6x14 TBCE
47	11.49070.000	2	250-300cc	Bullone M6x20 RS CH8	Bolt M6x20 RS CH8	Boulon M6x20 RS CH8	Bolzen M6x20 RS CH8	Tornillo M6x20 RS CH8
48	036.43.028.14.00	1	250-300cc	Tubo sfiato	Breather tube	Tuyau réniflard	Entlüftungsleitung	Tubo respiradero
49	036.43.010.00.00	1	250-300cc	Tappo serbatoio olio	Oil tank plug	Bouchon réservoir d'huile	Ölbehälterverschluß	Tapón depósito aceite
50	031.43.154.00.00	1		Decalco cerchi	Trimmings kit for rims	Jeu enjoliv. jantes	Abziehbildsatz Felgen	Juego calcom. llantas
50	031.43.156.00.00	1	RACING	Decalco cerchi	Rims stickers	Décalcomanie jantes	Abziehbild Felgen	Calcomaní as llantas
51	026.43.034.00.00	1		Anello di tenuta	Oil seal	Joint d'étanchéité	Ölschutzring	Retén de aceite

Tav.44



Betamotor S.p.A.

© Copyright 2016 Betamotor S.p.A.

Pos Loc Pos Ps Pos	Numero Number Numéro Número Nummer	Q.tà Q.ty Q.té M.ge C.ad	Nota Note Note Nota Anm.	Descrizione	Description	Désignation	Beschreibung	Descripción
1	026.44.032.00.00	1		CD Manuale uso e manutenzione	Owner' s manual CD	CD Manuel d' utilisation et entretien	CD Bedienungs und Wartungshandbuch	CD Manual de Uso y Manutención
2	020.44.202.80.00	1		Borsa attrezzi	Tool roll	Trousse à outils	Werkzeugtasche	Bolsa herramientas
3	020.44.003.00.00	1		Chiave a brugola 6mm	Allen wrench 6mm	Clé Allen 6mm	Sechskantschlüssel 6mm	Llave de imbus 6mm
4	020.44.004.00.00	1		Bussola 8	Bush 8	Joint 8	Buchse 8	Buje 8

Beta
motorcycles

WANT MORE?

Accessories, images, news, & more can be found at:

WWW.BETAUSA.COM

Rideability