RS

4-STROKE

350 / 390 / 430 / 500

Rideability

Beta motorcycles

2026 OWNERS MANUAL

RS 350-390-430-500 EFI

Thanks for you preference, and have a good time! This handbook contains the information you need to properly operate and maintain your motorcycle.

The data, specifications and images shown in this manual does not constitute an engagement on the part of BETAMOTOR S.p.A. BETAMOTOR reserves the right to make any changes and improvements to its models at any moment and without notice.

Code 037.44.134.83.00

USA

IMPORTANT

We recommend you to check all the tightenings after the first one or two hours' ride over rough ground. Special attention should be paid to the following parts:

- rear sprocket
- ensure that the footrests are properly fixed
- front/rear brake levers/calipers/discs
- check that the plastics are properly fastened
- engine bolts
- shock absorber bolts/swingarm
- wheel hubs/spokes
- rear frame
- pipe connections
- tensioning the chain

IMPORTANT

In the event of interventions on the vehicle, contact Betamotor after-sales service.

CONTENTS

Operating instructions 5
Symbols 5
Riding safety 6

CHAPTER 1 GENERAL INFORMATION 7
Vehicle identification data 8
Tools kit 8
Label location 10
Familiarizing with the vehicle 11
Specifications 12
Bulbs 15
Fuses 15
Recommended lubricants and liquid 15

CHAPTER 2 OPERATION 17
Main parts 18
Moto-GPS "Voyager" (Trail Tech) 22
Checks before and after use 23
Running in 23
Fuelling 24
Starting the engine 25
Engine shut-down 25
Vehicle preparation for use in heavy-duty conditions 26

CHAPTER 3 ADJUSTMENTS 29
Key to symbols 30
Brakes 30
Clutch 31
Adjustment of gas clearance 31
Idle adjustment 31
Handlebar adjustment 31
Adjusting fork 33
Shock absorber 35
Adjusting the headlight 38

CHAPTER 4 CHECKS AND MAINTENANCE 39
Engine oil 40
Gearbox oil 42
Liquid coolant 43

Air filter 46
Spark arrestor service 47
Carbon canister maintenance 48
Spark plug 49
Front brake 50
Rear brake 53
Clutch control 56
Check and adjusting of steering play 58
Fork 59
Front wheel 59
Tyres 60
Chain 60
Rear suspension leverage 60
Headlight 63
Tail light 63
Blinkers 63
Battery 64
Fuses 66
Cleaning the vehicle 67
Electrical connector maintenance 68
Prolonged inactivity 70
Scheduled maintenance vehicle 71
Tightening torque overview 73

CHAPTER 5 REMOVING AND INSTALLING SUPERSTRUCTURES 75
Removing and installing of the saddle 76
Removing and installing air filter cover panel 77
Removing and installing of the rear mudguard 78
Removing and installing of the engine protection 80
Removing and installing of the tank 81

CHAPTER 6 TROUBLESHOOTING 87
Troubleshooting 88

OPERATING INSTRUCTIONS

- The vehicle must be accompanied by: number-plate, registration document, tax disc and insurance.
- Any modifications of the engine or other parts are punishable by severe sanctions including the confiscation of the vehicle.
- To protect your safety and that of others, always drive carefully and with your helmet on and always keep low beams on.
- Do not sit on the vehicle when it is on its stand.
- Do not start the engine in closed places.

WARNING
Any modifications and tampering with the vehicle during the warranty period exempt the manufacturer from all responsibility and invalidate warranty.

SYMBOLS

SAFETY/ATTENTION
Failure to respect information marked with this symbol can entail a personal hazard.

INTEGRITY OF THE VEHICLE
Failure to respect information marked with this symbol can entail serious damage to the vehicle and termination of the warranty.

FLAMMABLE LIQUID HAZARD

Read the use and maintenance manual carefully.

MANDATORY TO WEAR PROTECTIVE CLOTHING
Use of the vehicle is subject to wearing specific protective clothing and safety footwear.

PROTECTIVE GLOVES MANDATORY
To perform the operations described, it is mandatory to wear protective gloves.

FORBIDDEN TO USE NAKED FLAMES OR POSSIBLE UNCONTROLLED IGNITION SOURCES

NO SMOKING

DO NOT USE MOBILE PHONE

CORROSIVE SUBSTANCES HAZARD
Liquids marked with this symbol are highly corrosive: handle with care

POISONING HAZARD

RIDING SAFETY

- Observe the Highway Code.
- Always wear approved personal protective equipment.
- Always ride with the low beam on.
- Always keep the crash helmet visor clean.
- Avoid wearing garments with hanging ends.
- Do not keep sharp or brittle objects in your pockets while riding.
- Properly adjust the rearview mirrors.
- Always ride in a seated position, with both hands on the handlebars and both feet on the footrests.
- Never ride abreast with other vehicles.
- Do not tow and avoid being towed by other vehicles.
- Always keep a safe distance from other vehicles.
- Do not start off while the vehicle is on its stand.
- Avoid swaying and wheelies as they are extremely dangerous for your own and other people's safety as well as for your vehicle.
- Always apply both brakes on dry roads with no gravel and sand. Using one brake may be dangerous and cause uncontrolled skidding.
- To reduce the braking distance, always apply both brakes.
- On wet roads and in off-road riding, drive with care and at moderate speed. Take special care in applying the brakes.

CHAPTER 1 GENERAL INFORMATION

CONTENTS

Vehicle identification data 8
Frame identification 8
Engine identification 8
Tools kit 8
Label location 10
Familiarizing with the vehicle 11
Main parts 11
Specifications 12
Weight 12
Dimensions 12
Tyres 12
Wheels 12
Capacities 12
Front suspension 13
Rear suspension 13
Front brake 13
Rear brake 13
Engine 14
Bulbs 15
Fuses 15
Recommended lubricants and liquid 15

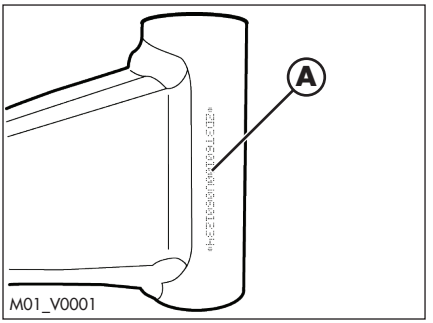

VEHICLE IDENTIFICATION DATA

FRAME IDENTIFICATION

Frame identification data **A** are stamped on the right side of the steering head tube.

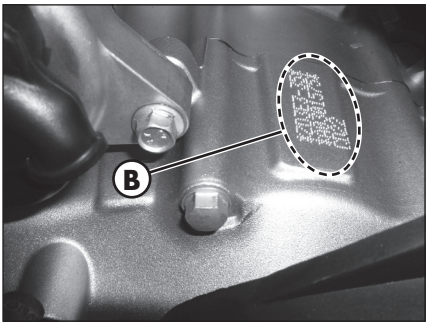

ENGINE IDENTIFICATION

Engine identification data **B** are stamped in the area shown in the figure.

TOOLS KIT

The following items are supplied as standard: operation, maintenance manual, tool kit and the cable adapter to connect the CAN socket to a scantool (see photo).

LABEL LOCATION

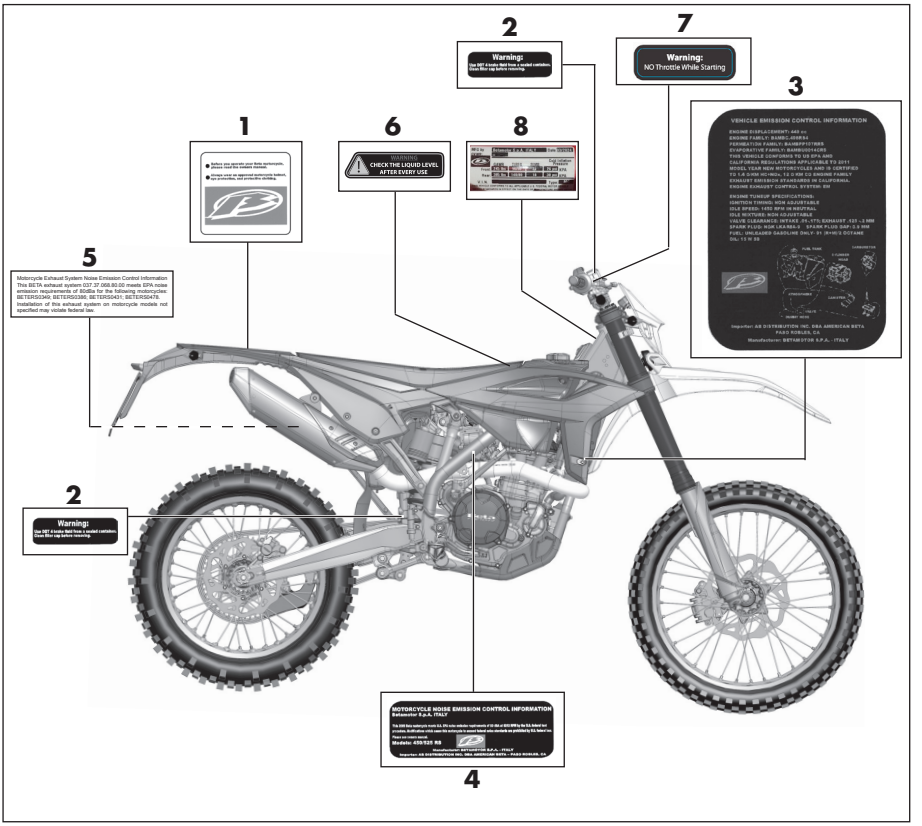

Label RS4T:

- **1** – Warnings plate
- **2** – Brake oil plate
- **3** – Technical plate and vapour recovery diagram
- **4** – Noise limit
- **5** – Exhaust muffler marking
- **6** – Liquid level check
- **7** – No throttle while starting
- **8** – Homologation plate

FAMILIARIZING WITH THE VEHICLE

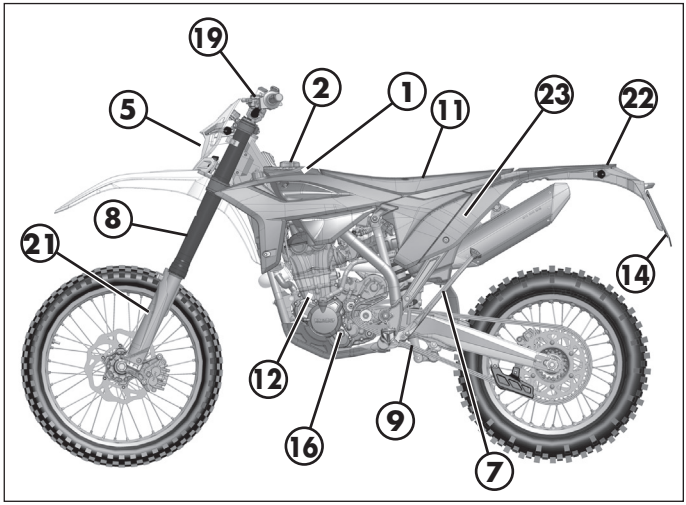

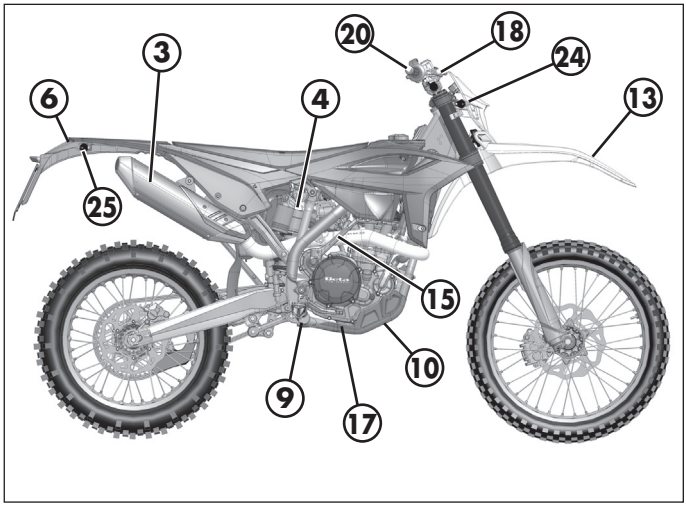

MAIN PARTS

1 - Fuel tank
2 - Tank cap
3 - Silencer
4 - Rear shock absorber
5 - Headlight
6 - Rear light
7 - Side stand
8 - Fork
9 - Rider's footrests
10 - Lower bumper (Bumper kit)
11 - Saddle
12 - Engine
13 - Front mudguard
14 - Number-plate holder
15 - Kick-start
16 - Gear lever
17 - Rear brake lever
18 - Front brake lever
19 - Clutch lever
20 - Throttle
21 - Fork covers
22 - Rear mudguard
23 - Cover air filter
24 - Front indicators
25 - Rear indicators

SPECIFICATIONS

WEIGHT

Weight in running order with full fuel and optional

Version	Total [kg]	Front [kg]	Rear [kg]
All versions	126	63	63

DIMENSIONS

maximum length (with plate holder) ..... 2270 mm
maximum width ..... 807 mm
overall height ..... 1270 mm
wheelbase..... 1490 mm
saddle height..... 940 mm
ground clearance..... 320 mm
footrest height..... 413 mm

TYRES

Dimensions		Pressure [Bar]	
Front tyre	**Rear tyre**	**Front tyre**	**Rear tyre**
90/90-21	**140/80-18**	**1,5 (road use)**	**1,8 (road use)**
		1 (off-road use)	**1 (off-road use)**

WHEELS

Version	Dimensions	
	Front	**Rear**
RR-S 350 - 390 - 430 - 480	J 21x1.6	J 18x2,15

CAPACITIES

fuel tank* ..... 9 liter
including reserve..... 2,5 liter
coolant circuit..... 1,3 liter
engine oil..... 750 ml following normal maintenance work
..... 800 ml following a complete engine review
gear oil..... 750 ml following normal maintenance work
..... 800 ml following a complete engine review

*Such data is referred to a conditioned and arranged tank

FRONT SUSPENSION

Open cartridge hydraulic upside-down fork (Ø48 mm shafts)

Spring (K-N/mm)	K 4,8
Oil type	FUCHS SAE 5W
Oil quantity*	525 g
Compression clicks (from completely closed)	10
Rebound clicks (from completely closed)	10
Sping preload clicks (from completely open)	0
Wheel excursion	300 mm

* For a completely dry fork

REAR SUSPENSION

Single shock absorber with compound lever

Spring (K-daN/mm)	K 5,4
Static sag load (see page 36)	35 mm
Compression clicks, high speeds (from completely closed)	18
Compression clicks, low speeds (from completely closed)	20
Rebound clicks (from completely closed)	16
Shock absorber travel	132 mm
Rear wheel travel	290 mm

FRONT BRAKE

Ø 260 mm disc and dual-piston floating caliper

REAR BRAKE

Ø240 mm disc and single-piston floating caliper

ENGINE

Version	RR-S 350	RR-S 390	RR-S 430	RR-S 500
Type	Single-cylinder, 4-stroke			
Bore x stroke [mm]	88x57,4	88x63,4	95x60,8	100x60,8
Displacement [cm³]	349,1	386	431	478
Compression ratio	13,19:1	12,5:1	12,3:1	11,9:1

Fuel system.....electronic injection, double injector

Cooling system ..... forced liquid circulation by pump

Spark plug ..... NGK LKAR 8A - 9

Clutch.....wet, multidisc

Transmission..... 6-speed with front claw clutch

Version	RR-S 430	RR-S 430	RR-S 430	RR-S 500
Primary drive	28/76	28/76	31/72	31/72
Gear ratio 1st gear	12/31	12/31	12/31	12/31
Gear ratio 2nd gear	15/28	15/28	15/28	15/28
Gear ratio 3rd gear	19/28	19/28	19/28	19/28
Gear ratio 4th gear	20/24	20/24	20/24	20/24
Gear ratio 5th gear	27/27	27/27	27/27	27/27
Gear ratio 6th gear	28/24	28/24	28/24	28/24
Final drive	13/50	13/49	13/49	13/49

Starting.....electric starter (Kick-starter optional)

BULBS

High beam/low beam ..... LED

Parking/daytime ..... LED

Turn indicators ..... 12V - RY10W

Rear position light/Stop light/License plate light ..... LED

FUSES

Six, three of them spare 10A

RECOMMENDED LUBRICANTS AND LIQUID

To maximize the vehicle's performance and ensure many years of trouble-free operation, we recommend using the following products:

PRODUCT TYPE	SPECIFICATIONS
FUEL	GASOLINE E5 95 RON
ENGINE OIL	LIQUI MOLY MOTORBIKE 4T SYNTH 10W-50 OFFROAD RACE
GEAR AND CLUTCH OIL	LIQUI MOLY MOTORBIKE 4T SYNTH 10W-50 OFFROAD RACE
BRAKE OIL	LIQUI MOLY BRAKE FLUID DOT 5.1
CLUTCH ACTUATOR OIL	LIQUI MOLY BRAKE FLUID DOT 5.1
FORK OIL	FUCHS SAE 5W
TIE ROD GREASE	LIQUI MOLY SCHMIERFIX
LIQUID COOLANT	LIQUI MOLY COOLANT READY MIX RAF12+

Note:
It is essential that all renewals should be performed with the products listed in the table above.

CHAPTER 2 OPERATION

CONTENTS

Main parts 18
Lights and key-switch 18
Clutch lever 19
LH switch 19
RH switch 19
Front brake lever and gas control 20
Gear change lever 20
Brake pedal 20
Kickstart - Optional 20
Side stand 21
Steering lock 21
Moto-GPS "Voyager" (Trail Tech) 22
Removing the lithium battery 22
Checks before and after use 23
Running in 23
Fuelling 24
Starting the engine 25
Engine shut-down 25
Vehicle preparation for use in heavy-duty conditions 26

MAIN PARTS

LIGHTS AND KEY-SWITCH

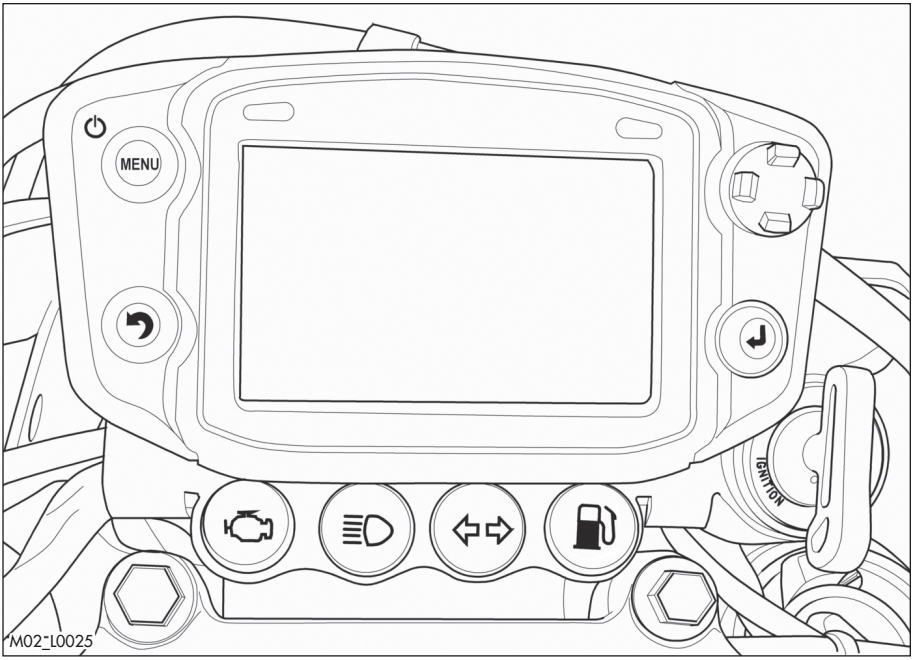

Keyswitch

The vehicle is supplied with two keys (one key and its spare), for the ignition switch.

- Turn the key to to start up the engine.
- Turn the key to to switch off the engine.

CAUTION:
Before start the engine, make sure the switch is on

Control lights

On the bottom side of MOTO – GPS there are four control lights:

: Injection light. Indicates a fault in the injection system. Contact as soon as possible an authorized Betamotor.

: high beam. Indicator glows when the high beam light is switched on

: blinker.

: Fuel reserve. Indicator glows when the fuel reaches reserve level (page 24). Refuel as soon as possible.

CLUTCH LEVER

Clutch lever is fitted to the left-hand side of the handlebars.

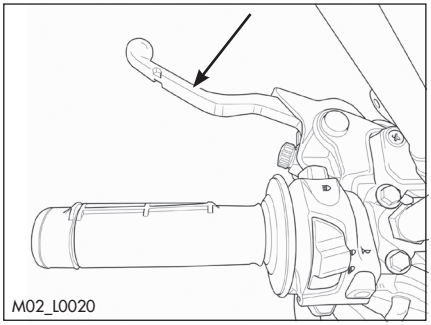

LH SWITCH

The dip and service switch is located on the left side of the handlebar and is composed as follows:

1 - Horn button;

2 - Dip switch:

parking lights and high beam;

parking lights and low beam;

3 - Flash-to-pass button;

4 - Turn signal light switch: shifting lever left or right activates the left or right indicators. When released, the lever returns to the central position. Press it to turn the indicators off.

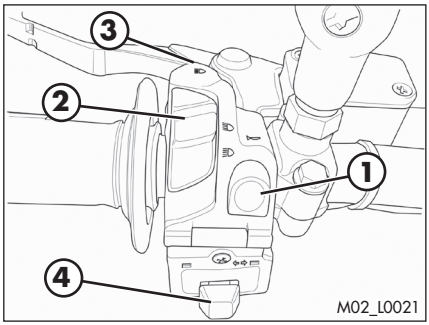

RH SWITCH

Starter button **1** is located on the right-hand side of the handlebars and operate the electric engine starter. For startup, refer to page 25. Do not press the button **1** while the engine is running.

The button **2** turns off the engine.

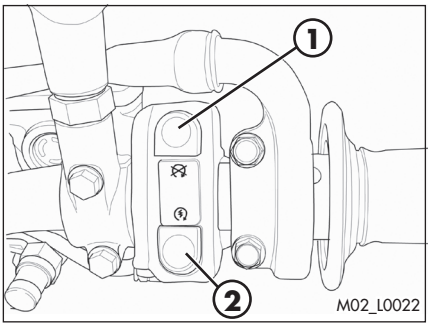

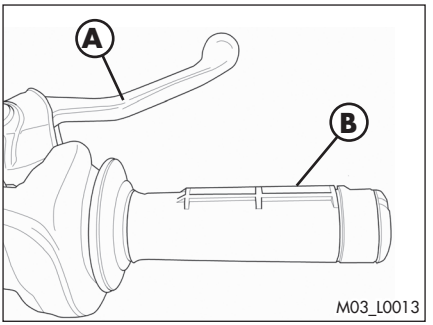

FRONT BRAKE LEVER AND GAS CONTROL

The front brake lever **A** and the gas throttle **B** are located on the right side of the handlebar.

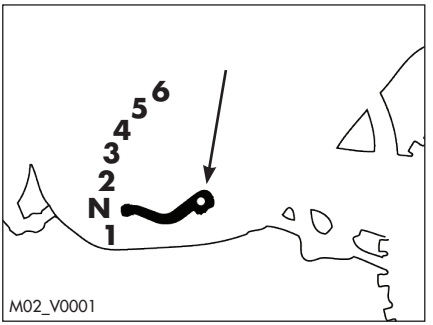

GEAR CHANGE LEVER

Gear change lever is fitted to the left side of the engine.
The positions corresponding to the different gears are shown in the figure.

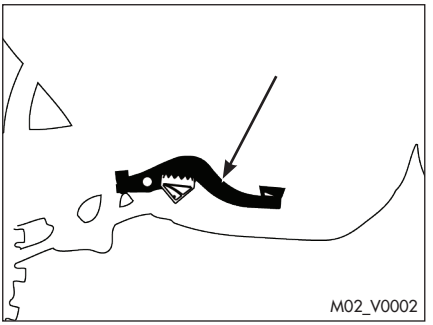

BRAKE PEDAL

Brake pedal is located in front of the right-hand footrest.

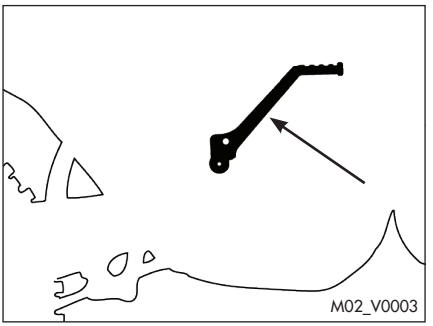

KICKSTART - OPTIONAL

The kick-starter pedal is located on the right side of the engine. The upper part is rotatable. To start, depress the kick-starter outward and with a quick movement downward.
The pedal will automatically return upwards. After starting, manually fold the pedal in the rest position.

SIDE STAND

Press down side stand with the foot and lean the vehicle against it.
Ensure that the ground is solid and the vehicle stands steadily.

WARNING: do not climb on the vehicle when the side stand is down.

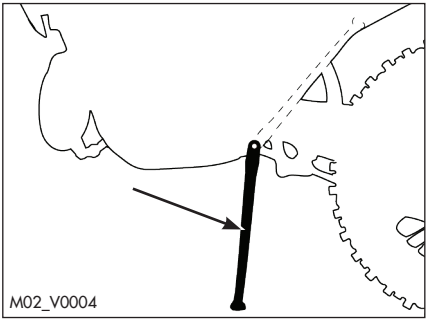

If the vehicle is used off-road, the closed stand can be further fastened by means of rubber band.

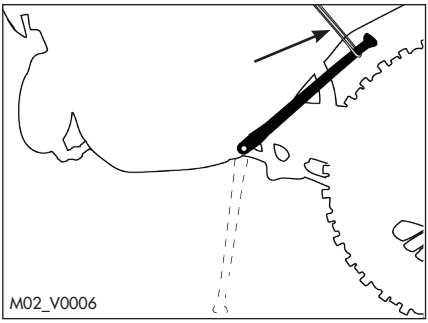

STEERING LOCK

To activate the steering lock:
- turn the handlebar counter-clockwise;
- push the key and turn counter-clockwise;

Remove the key from this position.
To deactivate the steering lock:
- turn the key clockwise;
- turn the handlebar clockwise;

From this position, the handlebar is free to move, the key can be removed.

WARNING: do not keep the spare key inside the vehicle, but in a safe place.
We suggest you note the code number stamped on the keys. In this way you can obtain a duplicate.

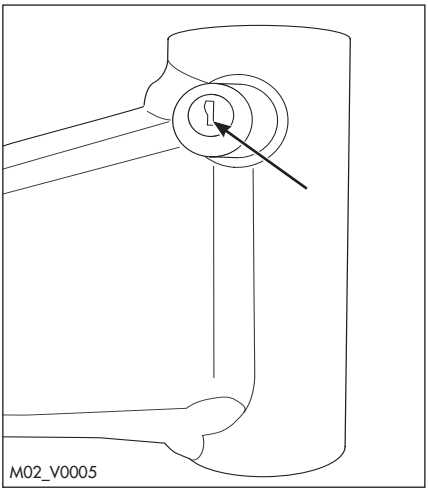

MOTO-GPS "VOYAGER" (TRAIL TECH)

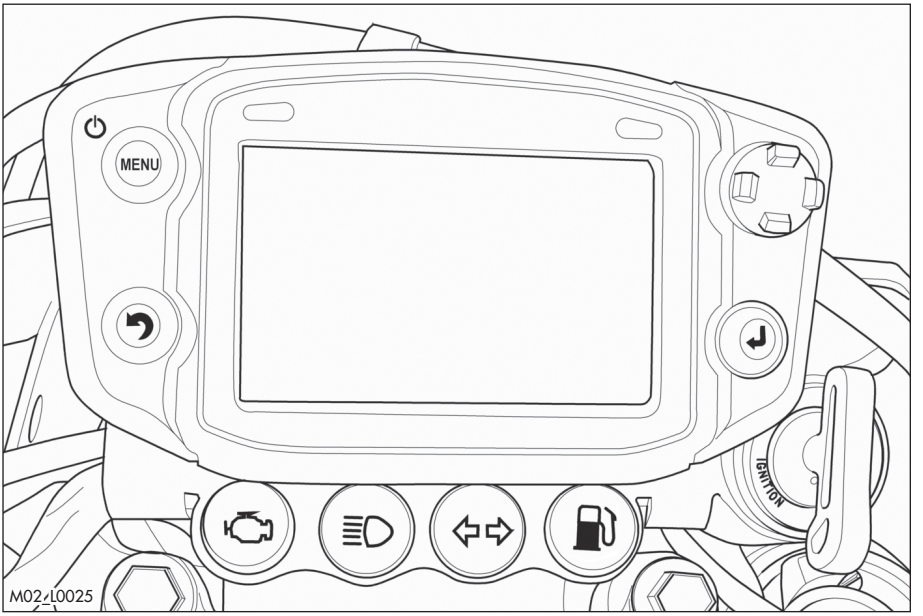

The dashboard user guide and the "RideLeader GPS File Editor" are available in the CD-ROM "TRAIL TECH" provided with the vehicle.

NOTE: The circumference of the front wheel is 2190mm (86,22in).

REMOVING THE LITHIUM BATTERY

To remove the lithium battery on the dashboard (see the dashboard user guide available in the CD-ROM "TRAIL TECH" provided with the vehicle) follow this steps:

1) remove the front mask;
2) remove the two fixing screws **1**;
3) disconnect the dashboard connectors to the electrical system;
4) remove the dashboard.

To refit, perform the above steps in reverse order.

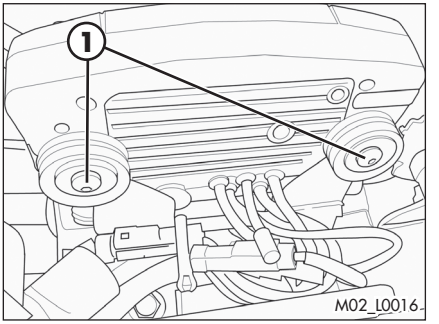

WARNING
Batteries contain environmentally hazardous materials, dispose of the used batteries at a local collection point.

CHECKS BEFORE AND AFTER USE

For safe driving and long vehicle life you should:

1 Check all fluid levels.

2 Check the correct operation of the brakes and brake pad wear (page 52).

3 Check pressure, general condition and thickness of tread.

4 Check that the spokes are properly tightened.

5 Check the tensioning of the chain (page 61).

6 Check the adjustment and the operation of all the cable controls.

7 Inspect all the nuts and bolts.

8 With the engine running, check the operation of the headlight, the rear and brake lights, the indicators, the warning lights and the horn.

9 Wash the motorcycle thoroughly after off-road use (page 67)

RUNNING IN

The running-in period lasts approximately 15 hours, during which it is advisable to:

1 During the first 3 hours of operation the engine should only be used to approximately 50 percent of its power. In addition, the engine speed should not exceed 7,000 rpm.

2 For the next 12 hours of operation the engine should only be used to about 75 percent of its power.

WARNING
After the first 3 hours change the engine and gear oil.

This procedure should be followed each time piston, piston rings, cylinder, crankshaft or crankshaft bearings are replaced.

2 FUELLING

See page 15 for the fuel specifications.

Fuel tank capacity is shown on page 12.

To refuel open the tank cap.

After refuelling, screw the cap back and tighten securely.

WARNING:
The refuelling should be performed with the engine off.

When the operation is finished, reconnect the ventilation pipe.

WARNING:
Fire hazard. Fuel is highly flammable.

Always stop the engine when refuelling and keep open flames and lighted cigarettes away.

Do not top up fuel while using a mobile phone.

Refuel in an open well ventilated area.

Pay special attention so that the fuel does not come into contact with hot parts of the vehicle. Immediately clean up any spilled fuel.

WARNING: Risk of poisoning.

Fuel is poisonous liquid and a health hazard.

Fuel must not come into contact with the skin, eyes, and clothing. Do not breathe in the fuel vapours. If contact occurs with the eyes, rinse immediately with plenty of water and seek medical advice. If contact occurs with skin, immediately clean contaminated areas with soap and water If fuel is swallowed, contact a doctor immediately. Change clothing that is contaminated with fuel.

WARNING: Environmental pollution hazard.

The fuel must not contaminate the ground water, the ground, or the sewage system.

STARTING THE ENGINE

The bike starts ONLY with the battery mounted on the vehicle and connected to the electrical system.

Turn the keyswitch to (page 19).

Check that the gears are in neutral (page 20).

Close the side stand (page 21).

WARNING:
During start-up do not operate the throttle.

WHIT ELECTRIC STARTER (page 19):
Press the startup button for a max of 3 seconds. If the vehicle does not startup, wait 30 seconds before attempting a new startup.
NOTE
Pauses are needed to diffuse the generated heat and to avoid damaging the battery. If the battery is at a temperature below 15°C, the electric startup will be weak, not because the battery is deteriorated but because it needs to be warmed up. Therefore, with temperatures below 15°C, several startup attempts may be necessary to heat the battery and thereby increase the battery power provided by the battery.

Do not press the button while the engine is running.

NOTE: If the battery charge is not sufficient to allow the electric starter you can still start the bike with the start lever if the battery voltage is more than 8V.

WITH KICK-STARTER (page 20):
Depress the kick-starter with a sharp movement of the foot.
In case of cold start with kick starter it is required to act on the starting lever for about three times.

DANGER: Exhaust gases are toxic and may cause unconsciousness and death. Start the engine only if there is sufficient ventilation or if an exhaust extraction system is fitted to the muffler.

WARNING:
Do not try to start the engine by combining the effect of the kick starter and the electric starter.

ENGINE SHUT-DOWN

To shut-down the engine press the button on the switch unit (page 19) or turn the keyswitch to (page 18).

WARNING:
In case of fall the vehicle turns off after about 5 seconds.

VEHICLE PREPARATION FOR USE IN HEAVY-DUTY CONDITIONS

Using the vehicle in heavy-duty conditions, such as sand or wet or muddy soils, may require the corrective actions mentioned below.

The following are considered heavy-duty operating conditions:

- Dry sand
- Wet sand
- Particularly wet and muddy soils
- Driving in high temperature and low speed conditions
- Driving in low temperature and snow conditions

General actions:

- Verify filter and filter box cleaning (page 47)
- Verify tensioning and wear of the chain (page 61)
- Verify all electrical connectors, making sure they are well connected. Keep them dry and clean.

USE ON DRY SAND

- Apply specific protection against sand to the air filter
- Clean the chain
- Assemble a steel crown. For this operation contact the Betamotor service network. (Do not grease the chain!)
- Verify that the radiator fins are clean
- Verify that the radiator fins are not bent

USE ON WET SAND

- Apply an anti-water cap for the water filter
- Clean the chain
- Assemble a steel crown. For this operation, contact the Betamotor service network. (Do not grease the chain!)
- Verify that the radiator fins are clean
- Verify that the radiator fins are not bent

USE ON PARTICULARLY WET AND MUDDY SOILS

- Apply an anti-water cap for the water filter
- Assemble a steel crown. For this operation contact the Betamotor service network.
- Verify that the radiator fins are clean
- Verify that the radiator fins are not bent
- After use, proceed with washing (page 67)

DRIVING IN HIGH TEMPERATURE AND LOW SPEED CONDITIONS

- Adjust crown size based on the route.
  Note: The oil has a tendency to heat up quickly when there is frequent clutch use and when using a crown whose dimensions are excessive. For this operation contact the Betamotor service network.
- Clean the chain
- Verify that the radiator fins are clean
- Verify that the radiator fins are not bent
- Verify cooling liquid level (page 43)
- For this use it is recommended to use an electric fan (optional). For the code, refer to the Betamotor accessory catalogue.

DRIVING IN LOW TEMPERATURE AND SNOW CONDITIONS

- Apply water protection to the air filter
- After use, proceed with washing (page 67)

CHAPTER 3 ADJUSTMENTS

CONTENTS

Key to symbols 30
Brakes 30
Front brake 30
Rear brake 30
Clutch 31
Adjustment of gas clearance 31
Idle adjustment 31
Handlebar adjustment 31
U-bolt position adjustment 31
Adjustment of the handlebar position 32
Adjusting fork 33
Adjusting the rebound damper 33
Adjusting the spring preload 33
Adjusting the compression damper 33
Adjusting the suspensions 34
Shock absorber 35
Adjusting the rebound damper 35
Adjusting the hydraulic compression damper (high and low speeds) 35
Adjusting the spring preload 36
Static sag load test 36
Suspensions settings according to the weight of the rider 37
Adjusting the headlight 38

KEY TO SYMBOLS

Tightening torque

Threadlocker Medium

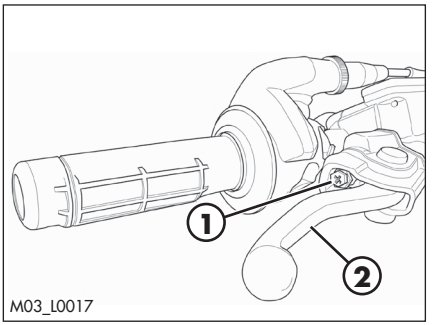

BRAKES

FRONT BRAKE

The front brake is disk type with hydraulic control.

The home position of brake lever **2** can be adjusted by means of screw **1**.

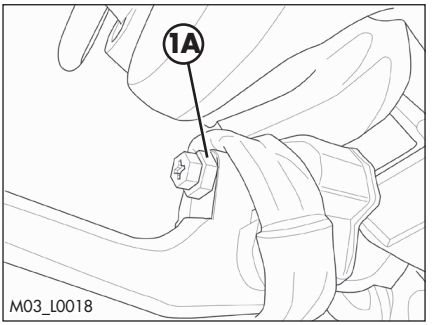

Warning! Once the adjustment has been made, tighten the locknut **1A**.

Warning! Do not remove the locknut for any reason **1A**.

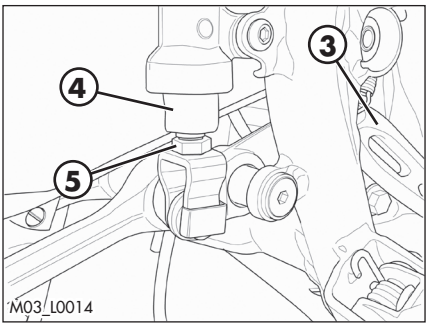

REAR BRAKE

The home position of brake pedal **3** can be altered by turning adjusting screw **5** after loosening the counternut located under dust cap **4**. Loosen the counternut and turn the adjusting screw until the desired height is obtained. Retighten the counternut after completing the operation.

CLUTCH

The adjustment screw **6** allows adjustment of the distance of lever **7** from the knob. The empty run is recovered automatically.

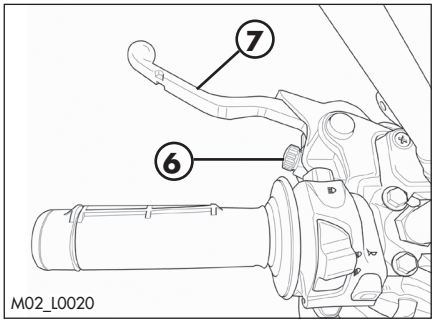

M02_L0020

ADJUSTMENT OF GAS CLEARANCE

The throttle control cable should always have a 3-5 mm play. In addition, the idle speed should not change when the handlebars are fully rotated to the left or right. Push back protective cap **1**. Loosen counternut **2** and turn adjusting screw **3**. Tighten the counternut and check that the throttle twist grip turns smoothly.

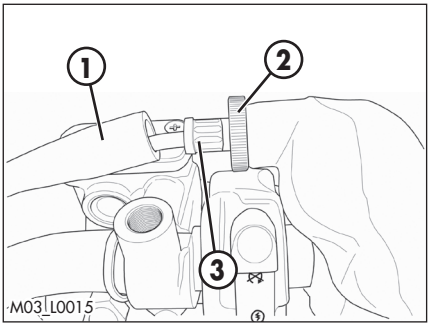

M03_L0015

WARNING! The incorrect routing of the cable may make the vehicle uncontrollable.

IDLE ADJUSTMENT

The minimum speed is controlled directly by the electronic control unit. Any manual adjustment is not allowed.

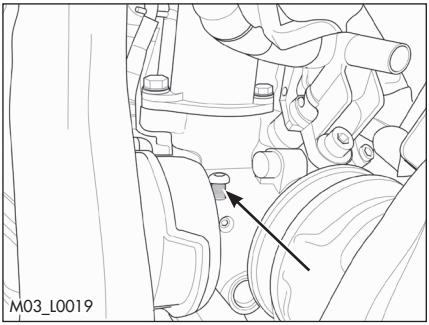
M03_L0019

WARNING! Do not modify the indicated screw for any reason. Modifying the position of this screw may cause abnormal response behaviour and engine operation. Moving the indicated screw, in terms of the warranty, is considered tampering.

HANDLEBAR ADJUSTMENT

U-BOLT POSITION ADJUSTMENT

The lower bracket **1** can be mounted on the holes nr. **2**, **3** or **4** respectively.

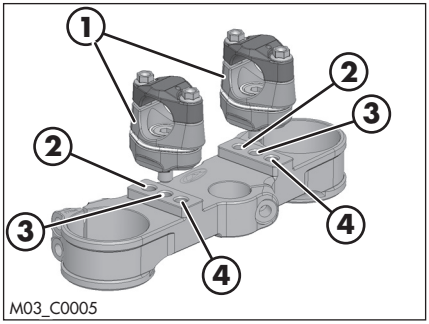

M03_C0005

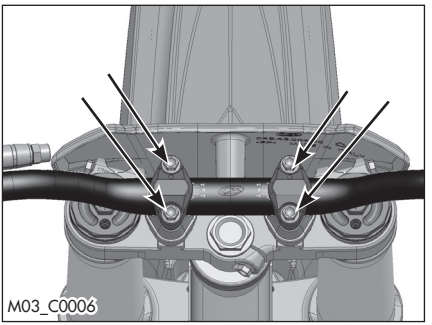

To adjust the position of the u-bolt remove the screws shown in the figure.

Remove the handlebar.

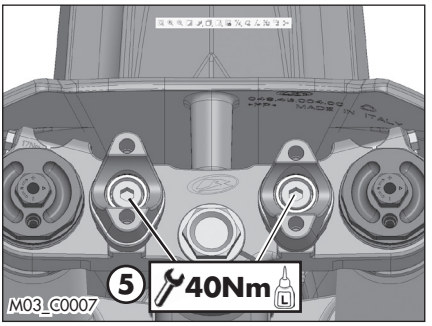

Remove the screws **5**.

Position the U-bolt as required.

At the end refit the screws **5** after the application of thread lock fluid and tighten to the torque indicated.

Apply the handlebar.

Apply the top u-bolt.

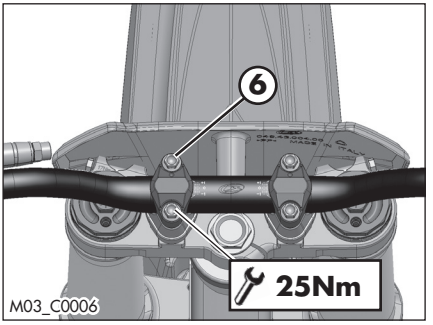

Refit the screws **6**. Tighten to the torque indicated.

NOTE: First, position the side of the U-bolt indicated with a dot and tighten to the specified torque. Then, perform the tightening on the other side as well.

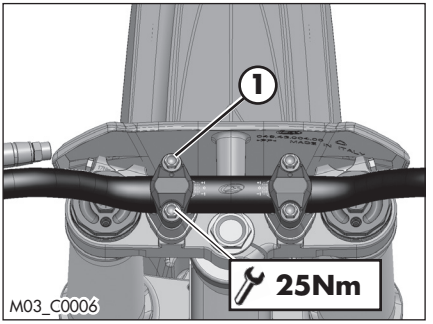

ADJUSTMENT OF THE HANDLEBAR POSITION

The handlebar can be adjusted by rotating it back and forth.

To adjust the handlebar loosen screws **1**.

Position the handlebar according to requirements.

Tighten to the torque indicated.

⚠ Damaged handlebar must be changed.

ADJUSTING FORK

ADJUSTING THE REBOUND DAMPER

The hydraulic rebound damper determines the behaviour of the telescopic fork during extension and can be adjusted by means of knob **A**. Turning the screw clockwise (towards +) increases the action of the rebound damper; turning it anticlockwise (towards -) decreases the action of the rebound damper.

For standard calibration, refer to page 13.

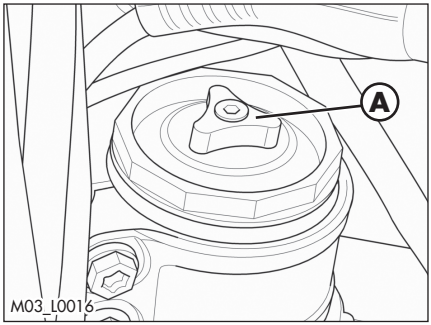

ADJUSTING THE SPRING PRELOAD

The spring pre-load instead adjusts the bike setup, especially according to the rider's weight. The front setup raises by moving the adjustment control **B** clockwise, and it lowers by moving it anticlockwise.

N.B. When the spring pre-load adjuster is turned, the hydraulic compression adjuster rotates too, but the latter does not change its setting.

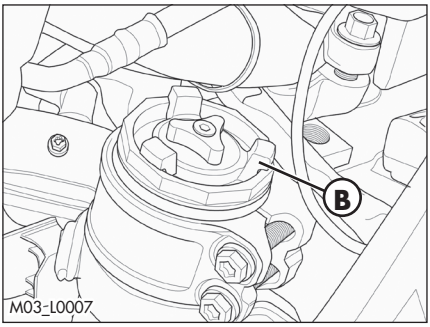

ADJUSTING THE COMPRESSION DAMPER

Hydraulic compression adjuster **C** is used to manage the ability of the fork to absorb a shock. The adjuster closes by moving the control towards the **+ sign**, thus increasing the braking effect; the adjuster opens by moving the control towards the **– sign**, thus decreasing the braking effect.

For standard calibration, refer to page 13.

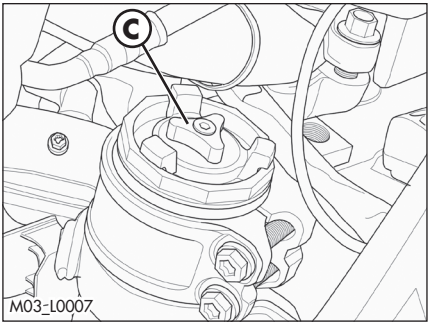

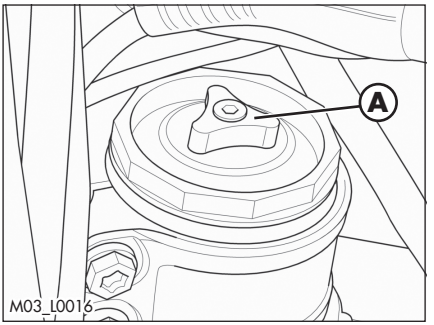

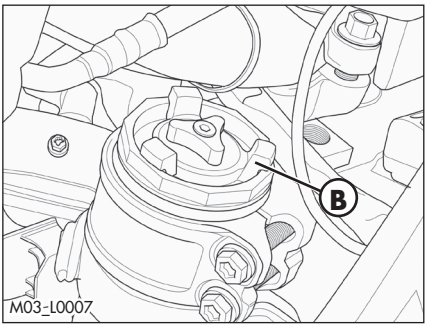

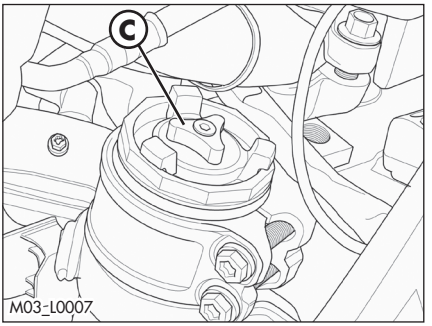

ADJUSTING THE SUSPENSIONS

Suggestions for adjustment according to use

• Increased comfort

To make it easier to follow the ground and its roughness, open (turn towards "-") the compression control **C** by about 5 clicks.

If after the modification the result is not as expected, the setup of the bike is probably too low and it is necessary to act on the spring pre-load adjuster **B**.

• Lack of grip

Dirt roads or not very challenging roads

To absorb even the smallest roughness, open (turn towards "-") the compression adjuster **C** by a few clicks..

Challenging terrain

For the use on challenging terrain it is necessary to intervene on the extension adjuster **A**. To find the right grip balance of the front wheel with respect to the terrain, open (turn towards "-") or close (turn towards "+") the adjuster.

Potholes in sequence or strong compressions

In the presence of potholes or strong compressions, close (turn towards "+") the compression adjuster **C** by a few clicks and, if necessary, close (turn towards "+") the spring pre-load adjuster **B** as well. Balance out the extension adjuster **A** accordingly to keep the best contact with the ground.

Muddy terrain

Act on the spring pre-load adjuster **B** by closing it (turning it towards "+") by a few turns to compensate for the weight of the mud that adheres to the bike, and to maintain a correct and constant setup.

SHOCK ABSORBER

ADJUSTING THE REBOUND DAMPER

Turn screw **A** to adjust the hydraulic rebound damper.

Turning the screw anticlockwise (out) decreases the damping effect.

For standard setting, refer to page 13.

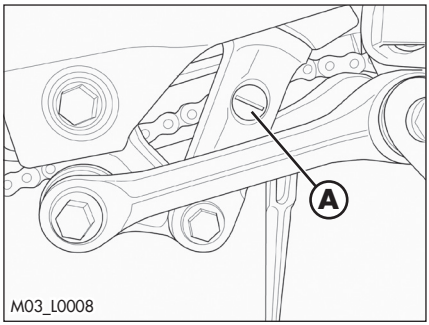

ADJUSTING THE HYDRAULIC COMPRESSION DAMPER (HIGH AND LOW SPEEDS)

Adjustment for low compression speed:
- Using a screwdriver, loosen screw **C** by turning it clockwise to increase the hydraulic compression damper.

For standard setting, refer to page 13.

Adjustment for high compression speed:
- Turn knob **D** anticlockwise to decrease the hydraulic compression damper.

For standard setting, refer to page 13.

WARNING:
Starting from the standard position, turn the knob anticlockwise (with a closing action), the center screw will have an integral movement, then will rotate with the knob.

For standard setting, refer to page 13.

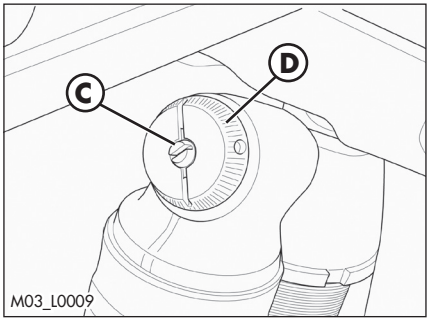

Always replace the fork or rear shock absorber in case of damage.

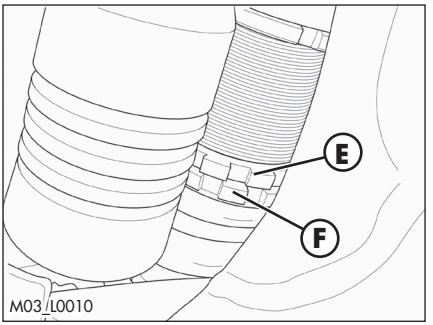

ADJUSTING THE SPRING PRELOAD

Loosen counter-ring **E**, rotate ring **F** clockwise to increase the spring preload (and consequently the shock absorber preload) or anticlockwise to decrease it. After obtaining the desired preload, turn counter-ring **E** until it stops against adjusting ring **F**.

For standard setting, refer to page 13.

NOTE: for the handling of ring nuts use the specific wrench provided in the standard tool kit shown in the figure.

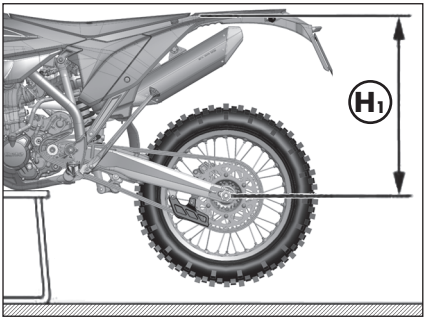

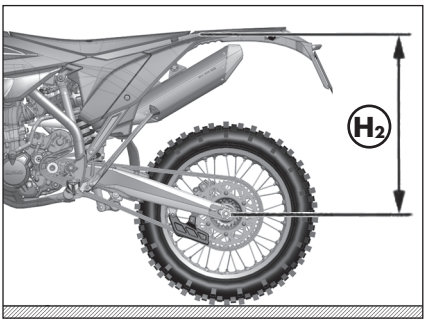

STATIC SAG LOAD TEST

To verify the static sag of the shock absorber proceed as follows:

- Place the motorcycle on the work stand.
- Measure the vertical distance between the rear wheel axle and a reference point on the rear fairings.
- Write down the dimension H_1.
- Remove the work stand.
- Keep the motorcycle in vertical position and measure again the distance between the wheel axle and the reference point previously established.
- Write down the dimension H_2.

Verify that the value of the static compression $X = H_1 - H_2$ matches the one shown on page 13. Otherwise, perform the adjustment of the spring preload as described above.

SUSPENSIONS SETTINGS ACCORDING TO THE WEIGHT OF THE RIDER

The table below shows the spring constant K of the suspensions (fork and shock absorber) depending on the weight of the driver.
Refer to the accessories catalogue Betamotor to obtain the spring codes.

Rider weight [kg]	K (Spring constant)	
	FORK [N/mm]	SHOCK ABSORBER [daN/mm]
<60	X	5,2
60-70	4,6	X
70-90	4,8	5,4
90-110	X	5,6
110-130	5	5,8
>130	5	6

Standard settings

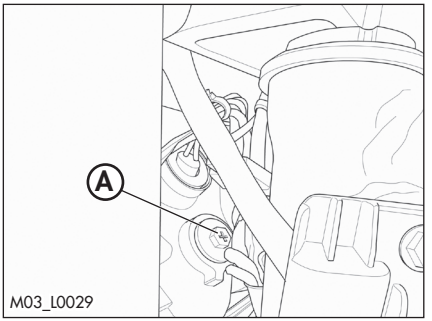

ADJUSTING THE HEADLIGHT

The beam is adjusted by turning the screw **A** on the back of the projector.

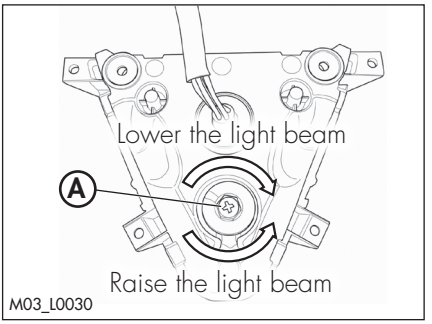

Turning screw **A** CLOCKWISE the light beam is lowered; by turning screw **A** ANTICLOCKWISE, the light beam rises.

Warning! When the screw begins to resist turning, stop the maneuver. Continuing may cause damage to the projector.

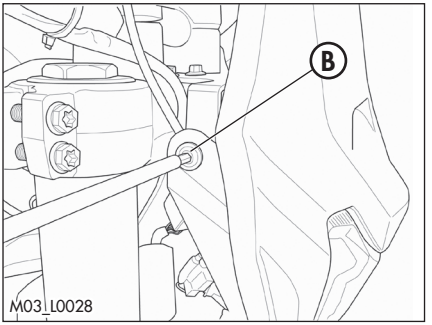

A further adjustment of the light beam takes place by loosening the screws **B** that fix the mask. By moving the mask forward, the light beam is lowered, while the mask is moved backward the light beam is raised.

Periodically check the direction of the beam. The beam can only be adjusted vertically.

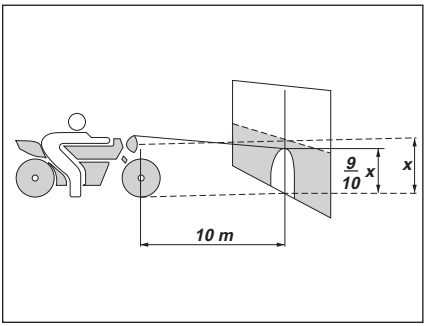

Place the vehicle on level ground (but not on the stand) 10 metres from a vertical wall.

Measure the height of the headlight centre above the ground and then draw a cross on the wall at 9/10 of the height of the headlight centre.

Turn on the low beam, get on the motorbike and check that the headlight beam on the wall is slightly lower than the cross drawn previously.

CHAPTER 4 CHECKS AND MAINTENANCE

CONTENTS

Engine oil....40
Check the level....40
Replacement....40
Gearbox oil....42
Check the level....42
Replacement....42
Liquid coolant....43
Check the level....43
Replacement....44
Air filter....46
Spark arrestor service....47
Carbon canister maintenance....48
Spark plug....49
Front brake....50
Check the level of the front brake fluid....50
Restoring the level of the front brake fluid....50
Bleeding the front brake....51
Front brake lining control....52
Brake disc thickness control....52
Rear brake....53
Check the level of the rear brake fluid....53
Restoring the level of the rear brake fluid....53
Bleeding the rear brake....54
Rear brake lining control....55
Brake disc thickness control....55
Clutch control....56
Check the level....56
Bleeding....57
Check and adjusting of steering play....58
Fork....59
Front wheel....59
Tightening....59
Tyres....60
Chain....60
Rear suspension leverage....60
Check and adjust tightening chain....61
Check for chain wear....62
Headlight....63
Tail light....63
Blinkers....63
Battery....64
Battery removal....64
Battery assembly....65
Inactivity....65
Charging the battery....66
Fuses....66
Cleaning the vehicle....67
General precautions....67
Electrical connector maintenance....68
Control unit connector....68
Air pressure and temperature sensor....69
Prolonged inactivity....70
Scheduled maintenance vehicle....71
Tightening torque overview....73

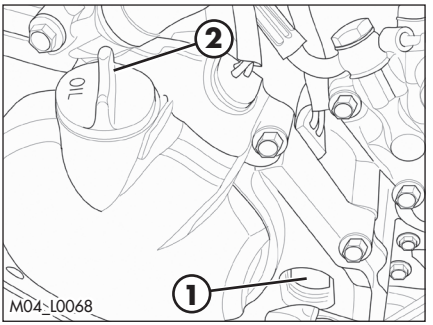

ENGINE OIL

CHECK THE LEVEL

1) Keep the vehicle in vertical position relative to the ground.
2) Position the drive on a flat base ensuring stability.
3) Start the engine and keep it running for about 2 minutes.
4) Keeping the engine idling, check that the oil level reach middle of the of the inspection window **1**.
5) If the level is below the edge of the window, switch off the engine and top up through the filler hole **2**. Load oil until it reaches the upper edge of the window.
6) Close the filling hole with the plug **2** and repeat steps 3, 4 and 5 until the condition in step 4 is satisfied.

Use the oil indicated on page 15 in the "Recommended lubricants and liquids" table.

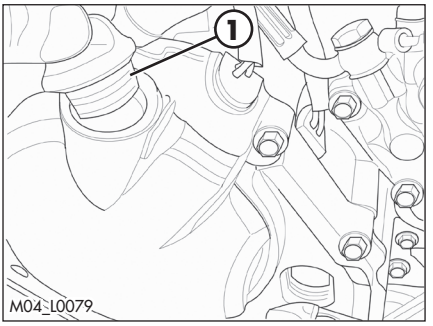

REPLACEMENT

Always perform the replacement when engine is hot:
- Position the drive on a flat base ensuring stability.
- Remove the engine casing (page 80).
- Place a container under the engine.

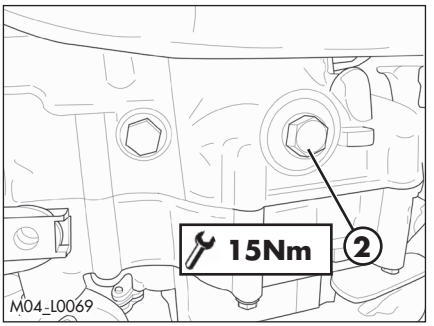

WARNING:
Hot oil can cause severe burns!

- Unscrew filler plug **1** and drain plug **2**.
- Remove the wire mesh filter.
- Drain all the oil from the crankcase.
- Thoroughly clean the drain plug, the wire mesh filter and the sealing surfaces.
- Mount the wire mesh filter and the drain plug.
- Tighten to the torque indicated.

To change the paper filter, remove the oil tap form engine unscrewing the two screws **3**. Using special seeger ring pliers, pull the paper oil filter.

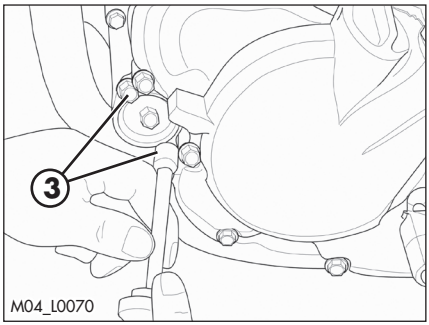

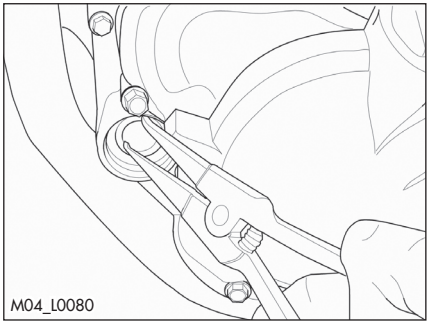

Mount the new paper filter, close the oil tap to engine, tighten the screws at 10 Nm.

Pour in the quantity of liquid indicated on page 12.
Use the oil indicated on page 15 in the "Recommended lubricants and liquids" table.

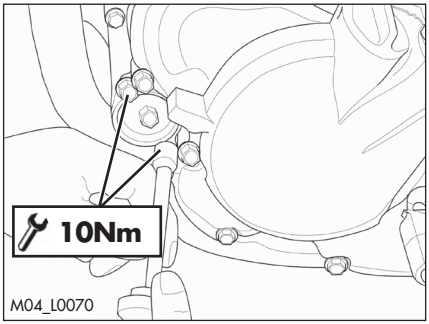

- Screw on filler cap **1** again.
- Check the oil level as described in paragraph "Check the level" (page 40).

WARNING:
Hot oil can cause severe burns!

ATTENTION:
Dispose of used oil in compliance with the regulations in force.

Refit the engine protection plate (page 80).

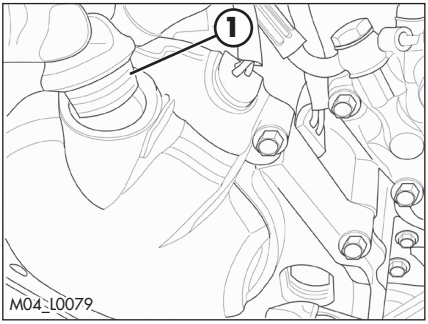

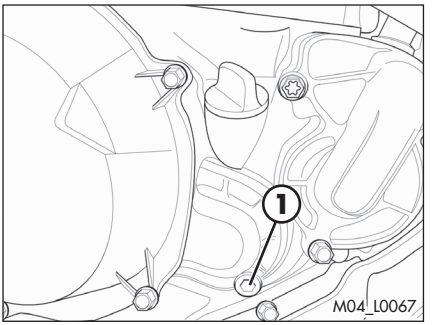

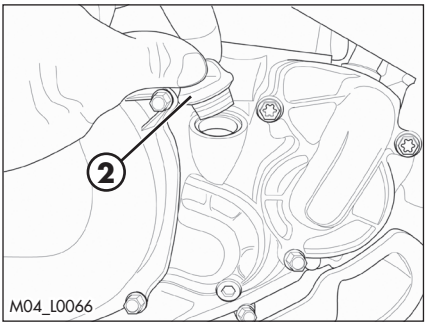

GEARBOX OIL

CHECK THE LEVEL

Hold the vehicle upright.
Position the drive on a flat base ensuring stability.

Remove the inspection cap **1**.

The oil level must arrive to the lower edge of check hole.

In contrary case restore the oil level through cap **2**.

The inspection cap is ONLY to check the oil level. For the oil drain, refer to the paragraph Replacement on page 42.

Use the oil indicated on page 15 in the "Recommended lubricants and liquids" table.

REPLACEMENT

Always perform the replacement when engine is hot:
- Position the drive on a flat base ensuring stability.
- Remove the engine casing (page 80).
- Place a container under the engine.

WARNING:
Hot oil can cause severe burns!

- Unscrew filler plug **2** and drain plug **3**.
- Drain all the oil from the crankcase.
- Apply the cap **3** and tighten up to the specified torque.

Pour in the quantity of liquid indicated on page 12.

Use the oil indicated on page 15 in the "Recommended lubricants and liquids" table.

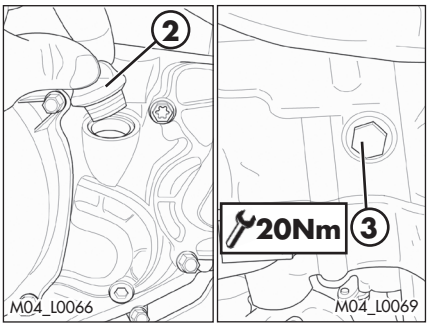

Close plug **2**.

WARNING:
Hot oil can cause severe burns!

ATTENTION:
Dispose of used oil in compliance with the regulations in force.

Re-assemble the engine protection plate (page 80).

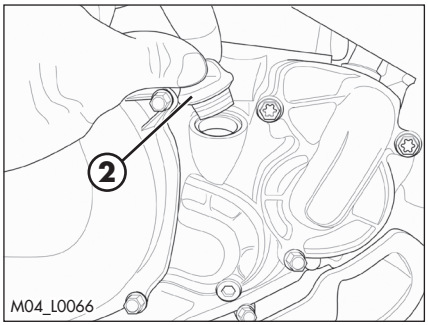

LIQUID COOLANT

CHECK THE LEVEL

WARNING: Never unscrew the filler cap of the radiator when the engine is hot. Danger of burning!

Keep the vehicle in vertical position relative to the ground.

The level of the coolant must be checked when the engine is cold. Use the following procedure:

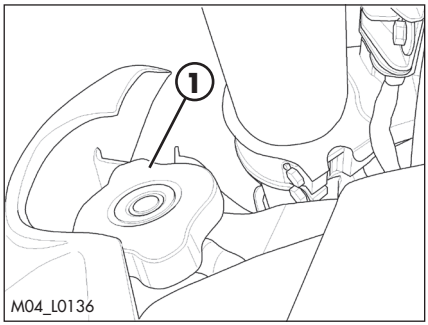

- Unscrew cap **1** and ensure that the liquid is visible in the lower portion of the loading tube.
- In the case in which the liquid is not visible proceed topping up.
- At the end of operation refit the filler cap.

Use the liquid coolant indicated on page 15 in the "Recommended lubricants and liquids" table.

WARNING: Never unscrew the filler cap of the radiator when the engine is hot. Danger of burning!

WARNING:
Wear appropriate protective clothing and protection gloves.

Keep coolant out of reach of children.

Avoid any direct contact of the coolant with skin, eyes or clothing. If this happens:

- with the eyes, rinse immediately with plenty of water and seek medical advice;
- with skin, Immediately clean contaminated areas with soap and water Change clothing that is contaminated with coolant.

If coolant is swallowed, contact a doctor immediately.

REPLACEMENT

Keep the vehicle in vertical position relative to the ground.

Replacement of the coolant must take place when the engine is cold.

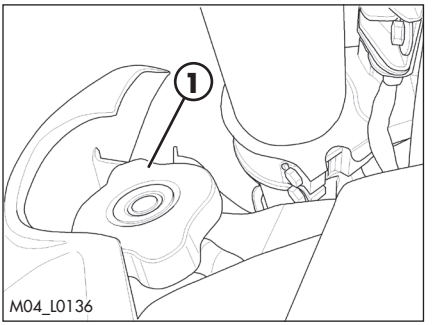

- Unscrew cap **1**.

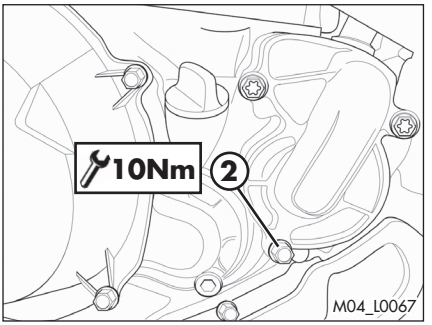

- Place a container under screw **2**.
- Unscrew the screw **2**.
- Drain the liquid.
- Tighten screw **2** applying the specific washer.
- Top up.
- Reapply the loading cap.

The amounts of liquid are shown on page 12.

Use the liquid indicated on page 15 in the "Recommended lubricants and liquids" table.

WARNING:
Never unscrew the filler cap of the radiator when the engine is hot. Danger of burning!

WARNING:
Wear appropriate protective clothing and protection gloves.

Keep coolant out of reach of children.

Avoid any direct contact of the coolant with skin, eyes or clothing. If this happens:

- with the eyes, rinse immediately with plenty of water and seek medical advice.
- with skin, Immediately clean contaminated areas with soap and water Change clothing that is contaminated with coolant.

If coolant is swallowed, contact a doctor immediately.

AIR FILTER

Check after every ride.

To access the filter:
- Remove the filter cover panel (page 77).

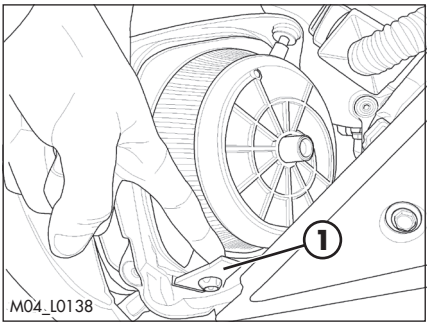

- Release filter fastener **1**

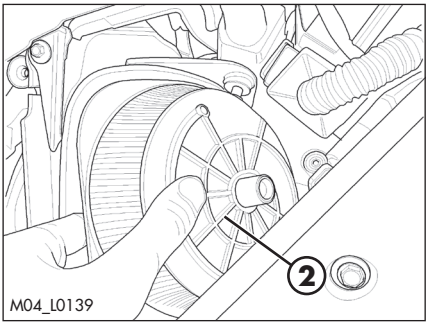

- Pull out air filter **2**

Reassemble by performing the operations in reverse order.

WARNING:
After every intervention, check that nothing has been left inside the filter box.

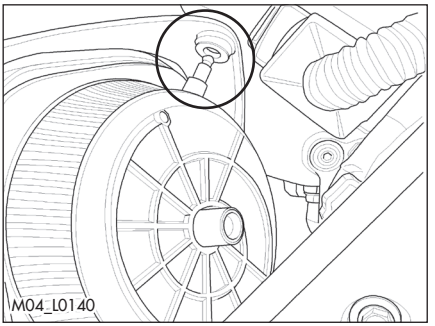

WARNING!
When re-inserting the filter, be careful that the pin on the filter cage is properly engaged into the specific housing.

WARNING:
Do not clean the filter with gasoline or petrol.

NOTE:
If the filter is damaged, replace it immediately.
To replace, contact authorised Betamotor customer service.

WARNING:
Never use the vehicle if the air filter is not in place. The infiltration of dust and dirt can cause damage and considerable wear.

WARNING:
After every intervention, check that nothing has been left inside the filter box.

SPARK ARRESTOR SERVICE

The spark arrestor should be periodically cleaned to remove accumulated carbon. A plugged spark arrestor will affect engine performance.
Replace a cracked or damaged spark arrestor before running the vehicle.

CAUTION: do not operate if silencer is hot or the engine is running.

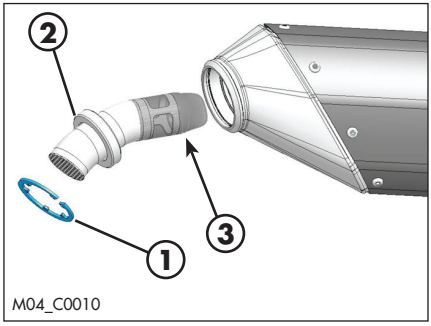

1. Remove the spark arrestor screen fastener **1**.
2. Remove the spark arrestor **2** from the end of the muffler.
3. Use a brush to clean the screen **3** on the spark arrestor.
   Be careful to avoid damaging spark arrestor during the clean operation. If necessary, blow debris from the screen with compressed air.
4. Inspect the screen for wear and damage. Replace if damaged.
5. Install the spark arrestor and fasten with retainer ring.

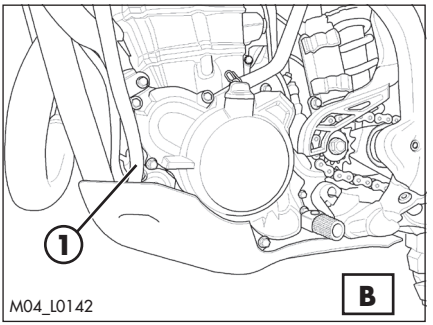

CARBON CANISTER MAINTENANCE

- Remove the fuel accumulation tube **1** of the carbon canister from its posiiton.

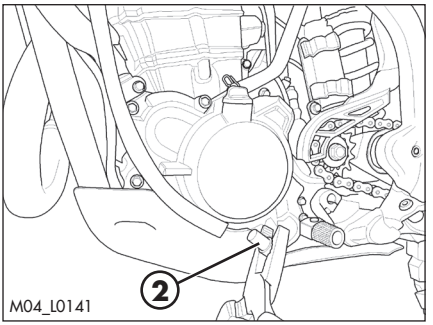

- Remove the cap **2** and drain the accumulated fuel from the tube into a suitable container.

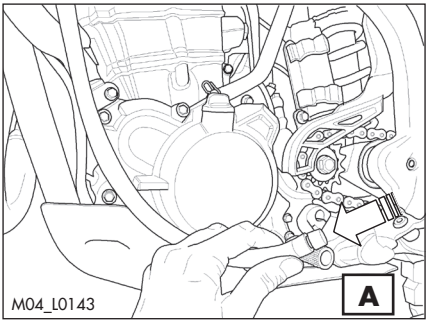

- Reinsert the cap into its seat as shown in Figure **A**.
- Reinsert the tube into its correct position as shown in Figure **B**.

WARNING:
Follow action on a cold engine and in a well ventilated area.

WARNING:
Fire hazard. Fuel is highly flammable.

Always stop the engine when refuelling and keep open flames and lighted cigarettes away.

Immediately clean up any spilled fuel.

WARNING: Risk of poisoning. Fuel is poisonous liquid and a health hazard.

WARNING: Environmental pollution hazard.

The fuel must not contaminate the ground water, the ground, or the sewage system.

ATTENTION: Dispose of fuel in compliance with the regulations in force.

SPARK PLUG

Keeping the spark plug in good condition will reduce fuel consumption and increase engine performance.

To accede to spark plug, is necessary to take off saddle (page 77) and the fuel tank (page 81).

Examine the distance between the electrodes with a feeler. This distance should be from 0,5÷0,6 mm. If it is not, it may be corrected by bending the earth electrode.

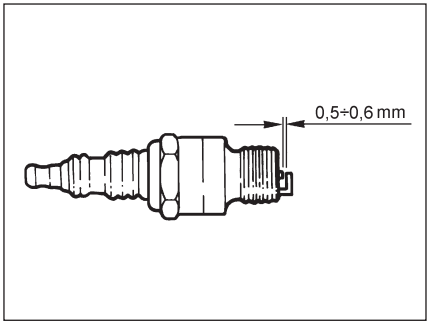

Check as well that there are no cracks in the insulation or corroded electrodes. If so, replace immediately.

When replacing the spark plug, screw it in by hand until it stops, then tighten with a wrench.

WARNING:
Do not check while the engine is hot.

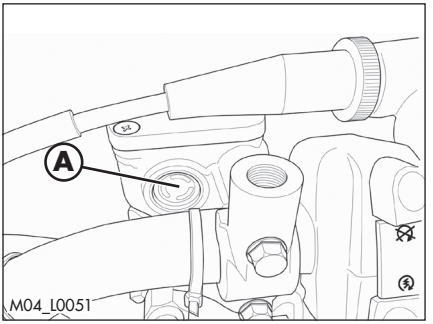

FRONT BRAKE

CHECK THE LEVEL OF THE FRONT BRAKE FLUID

Check the level of the brake fluid through sight **A**. The level of the fluid should never fall below the mark in the sight.

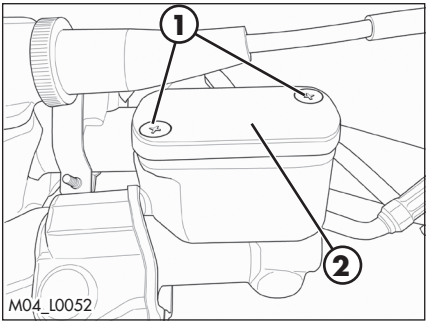

RESTORING THE LEVEL OF THE FRONT BRAKE FLUID

To restore the level of the brake fluid, loosen the two screws **1**, lift cap **2** and add brake fluid until its level is 5 mm below the upper rim of the reservoir.

Use the liquid indicated on page 15 in the "Recommended lubricants and liquids" table.

WARNING:
The brake fluid is extremely corrosive. Take care not to spill it on the paintwork.

Wear appropriate protective clothing and protection gloves.

Keep coolant out of reach of children.

WARNING: Avoid any direct contact of the liquid with skin, eyes or clothing. If this happens:

- with the eyes, rinse immediately with plenty of water and seek medical advice.
- with skin, immediately clean contaminated areas with soap and water. Change clothing that is contaminated with liquid.

If liquid is swallowed, contact a doctor immediately.

BLEEDING THE FRONT BRAKE

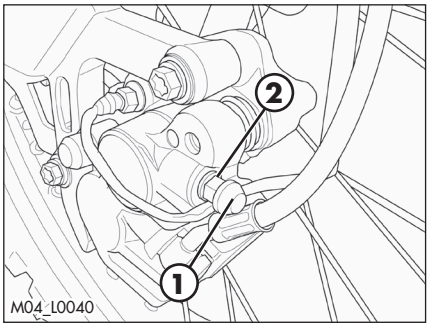

To bleed air from the front brake circuit, proceed as follows:

- Remove the rubber cap **1** from the valve **2**.
- Open the sump cap.
- Place one end of a small transparent tube into the valve **2**, and the other end inside a container.
- Pump with the brake lever 2/3 times and keep the lever pressed.
- Unscrew the valve and let the oil drain.
- If are still visible in the tube repeat above operation until obtaining a continuous outflow of oil within no air bubbles.
- Close the valve and release the lever.

NOTE:
during this procedure, continuously top up the brake pump thank to replace the oil that is out flowing.

- Remove the tube.
- Replace the rubber cap.
- Close the oil reservoir cap.

Use the liquid indicated on page 15 in the "Recommended lubricants and liquids" table.

WARNING:
The brake fluid is extremely corrosive. Take care not to spill it on the paintwork.

Wear appropriate protective clothing and protection gloves.

Keep coolant out of reach of children.

WARNING: Avoid any direct contact of the liquid with skin, eyes or clothing. If this happens:

- with the eyes, rinse immediately with plenty of water and seek medical advice.
- with skin, immediately clean contaminated areas with soap and water. Change clothing that is contaminated with liquid.

If liquid is swallowed, contact a doctor immediately.

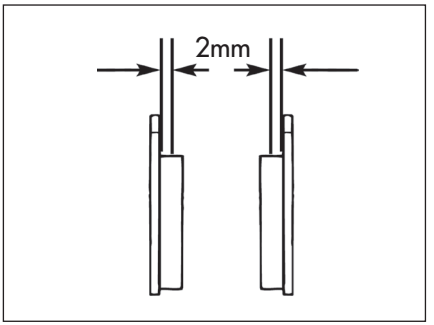

FRONT BRAKE LINING CONTROL

In order to verify the wear condition of front brake is enough to view the caliper from the bottom, where is possible to glimpse the brake lining tails which will have to show a brake of 2 mm in thickness. If the stratum is lesser let's start replacing them.

NOTE:
Perform the check according to the times shown in the table on page 71.

To replace, contact authorised Betamotor customer service.

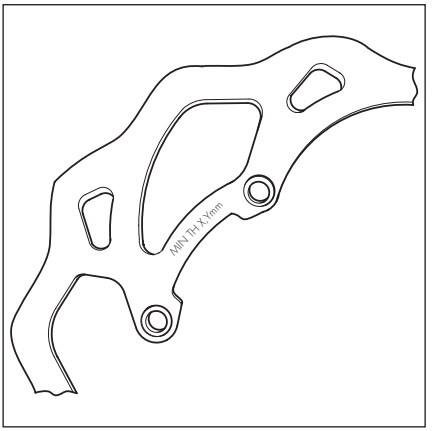

BRAKE DISC THICKNESS CONTROL

Periodically verify disc condition. In case signs of damage , veins, or deformations are present, proceed with replacement.
Verify disc thickness. The minimum thickness is engraved on the disc.
Once the limit is in proximity or has been reached, proceed with brake disc replacement.
For replacement, contact an authorised Betamotor after-sales service centre.

WARNING: If the brake pads or disc are damaged, replace both.

REAR BRAKE

CHECK THE LEVEL OF THE REAR BRAKE FLUID

Check the level of the brake fluid through sight **A**. The level of the fluid should never fall below the mark in the sight.

RESTORING THE LEVEL OF THE REAR BRAKE FLUID

To restore the oil level, top up by means of oil filler cap **1**.

Use the liquid indicated on page 15 in the "Recommended lubricants and liquids" table.

WARNING:
The brake fluid is extremely corrosive. Take care not to spill it on the paintwork.

Wear appropriate protective clothing and protection gloves.

Keep coolant out of reach of children.

WARNING: Avoid any direct contact of the liquid with skin, eyes or clothing. If this happens:

- with the eyes, rinse immediately with plenty of water and seek medical advice.
- with skin, immediately clean contaminated areas with soap and water. Change clothing that is contaminated with liquid.

If liquid is swallowed, contact a doctor immediately.

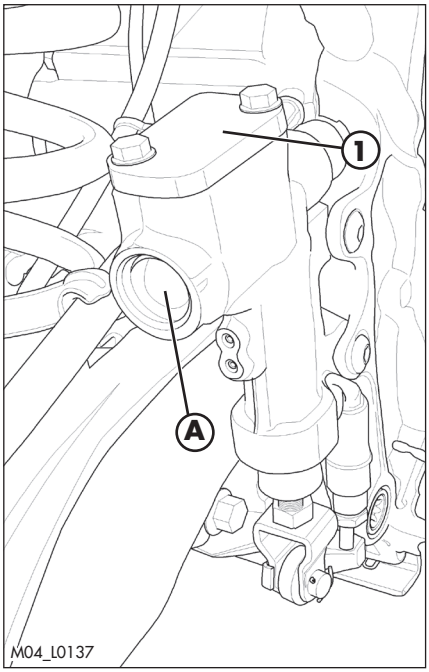

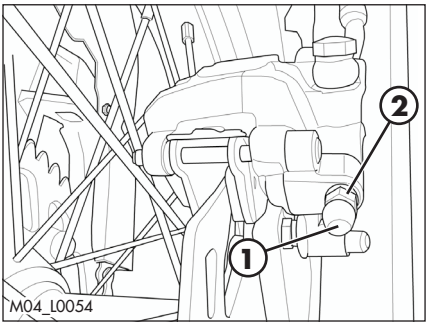

BLEEDING THE REAR BRAKE

To bleed air from the rear brake circuit, proceed as follows:

- Remove the rubber cap **1** from the valve **2**.
- Open the sump cap.
- Place one end of a small transparent tube into the valve **2**, and the other end inside a container.
- Pump with the brake lever 2/3 times and keep the pedal pressed.
- Unscrew the valve and let the oil drain.
- If are still visible in the tube repeat above operation until obtaining a continuous outflow of oil within no air bubbles.
- Close the valve and release the lever.

NOTE:
During this procedure, continuously top up the brake pump thank to replace the oil that is out flowing.

- Remove the tube.
- Replace the rubber cap.
- Close the oil reservoir cap.

Use the liquid indicated on page 15 in the "Recommended lubricants and liquids" table.

WARNING:
The brake fluid is extremely corrosive. Take care not to spill it on the paintwork.

Wear appropriate protective clothing and protection gloves.

Keep coolant out of reach of children.

WARNING: Avoid any direct contact of the liquid with skin, eyes or clothing. If this happens:

- with the eyes, rinse immediately with plenty of water and seek medical advice.
- with skin, immediately clean contaminated areas with soap and water. Change clothing that is contaminated with liquid.

If liquid is swallowed, contact a doctor immediately.

REAR BRAKE LINING CONTROL

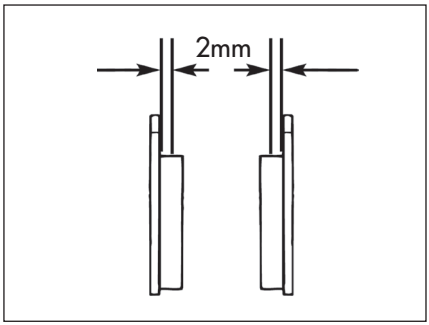

In order to verify the wear condition of front brake is enough to view the caliper from the bottom, where is possible to glimpse the brake lining tails which will have to show a brake of 2 mm in thickness. If the stratum is lesser let's start replacing them.

NOTE:
Perform the check according to the times shown in the table on page 71.

To replace, contact authorised Betamotor customer service.

BRAKE DISC THICKNESS CONTROL

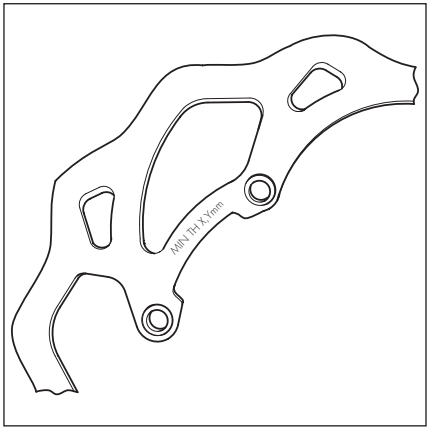

Periodically verify disc condition. In case signs of damage , veins, or deformations are present, proceed with replacement.
Verify disc thickness. The minimum thickness is engraved on the disc.
Once the limit is in proximity or has been reached, proceed with brake disc replacement.
For replacement, contact an authorised Betamotor after-sales service centre.

WARNING: If the brake pads or disc are damaged, replace both.

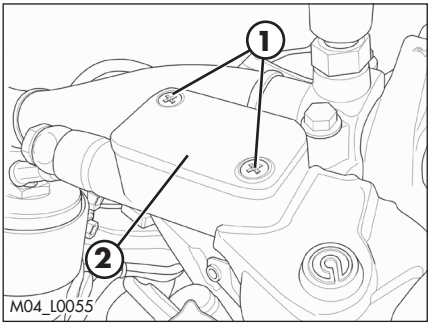

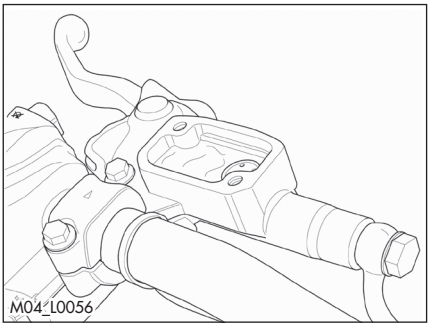

CLUTCH CONTROL

CHECK THE LEVEL

To check the oil level in the clutch pump, first remove cover **2**.
Remove the two screws **1** and take off cover **2** together with the rubber bellows.
With the clutch pump in a horizontal position, the level of the oil should be 5 mm below the upper rim.
In the case where the level is lower than specified top up.

Use the liquid indicated on page 15 in the "Recommended lubricants and liquids" table.

WARNING:
The clutch fluid is extremely corrosive. Take care not to spill it on the paintwork.

Wear appropriate protective clothing and protection gloves.

Keep coolant out of reach of children.

WARNING: Avoid any direct contact of the liquid with skin, eyes or clothing. If this happens:

- with the eyes, rinse immediately with plenty of water and seek medical advice.
- with skin, immediately clean contaminated areas with soap and water. Change clothing that is contaminated with liquid.

If liquid is swallowed, contact a doctor immediately.

BLEEDING

To bleed air from the clutch pump, proceed as follows:

- Remove the rubber cap **1** from the valve **2**.
- Open the sump cap.
- Place one end of a small transparent tube into the valve **2**, and the other end inside a container.
- Pump with the clutch lever 2/3 times and keep the lever pressed.
- Unscrew the valve and let the oil drain.
- If are still visible in the tube repeat above operation until obtaining a continuous outflow of oil within no air bubbles.
- Close the valve and release the lever.

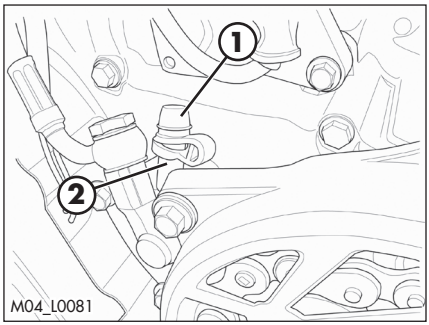

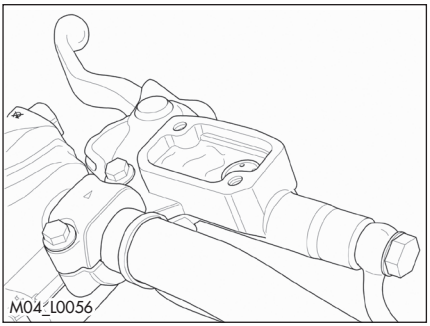

NOTE:
During this procedure, continuously top up the pump tank to replace the liquid that is out flowing.

- Remove the tube.
- Replace the rubber cap.

Use the liquid indicated on page 15 in the "Recommended lubricants and liquids" table.

WARNING:
The clutch fluid is extremely corrosive. Take care not to spill it on the paintwork.

Wear appropriate protective clothing and protection gloves.

Keep coolant out of reach of children.

WARNING: Avoid any direct contact of the liquid with skin, eyes or clothing. If this happens:

- with the eyes, rinse immediately with plenty of water and seek medical advice.
- with skin, immediately clean contaminated areas with soap and water. Change clothing that is contaminated with liquid.

If liquid is swallowed, contact a doctor immediately.

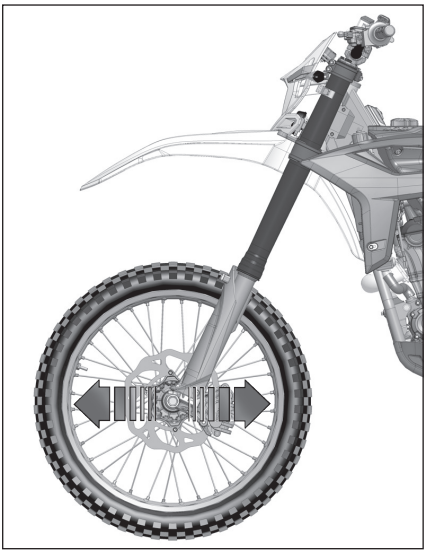

CHECK AND ADJUSTING OF STEERING PLAY

Periodically check the play in the steering sleeve by moving the fork back and forth as shown in the figure. Whenever you feel play, adjust as described below:

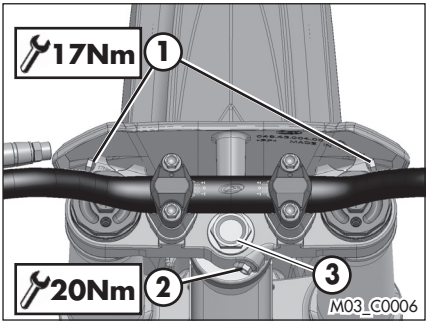

- Loosen the screws **1**
- Loosen the screw **2**
- Reduce the play by turning nut **3**

Tighten the screws to the prescribed torque values.

WARNING:
Tightening of the screws should be carried out by adjusting the torque wrench to the stability torque with repeated tightening until stability torque has been achieved.

FORK

To maintenance refer at an authorized service centre Betamotor.

To check the tightening torques see as shown in the figure.

WARNING:
Tightening of the screws should be carried out by adjusting the torque wrench to the stability torque with repeated tightening until stability torque has been achieved.

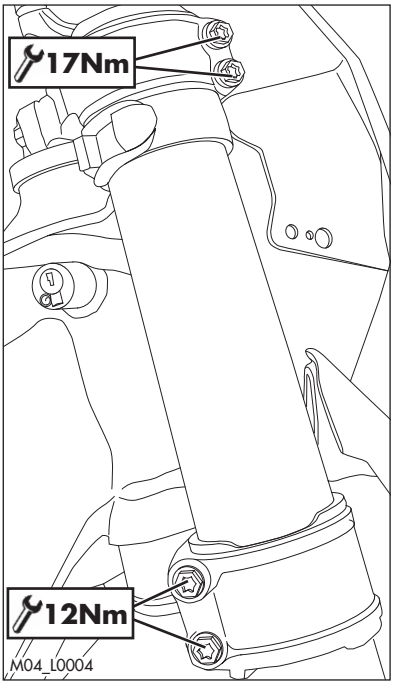

FRONT WHEEL

TIGHTENING

Following removal of the wheel:

Compress and release the fork 3-4 times.

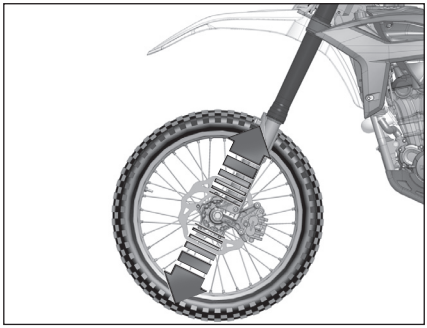

Tighten the wheel bolt and the screws of the foot-legs.

WARNING:
Tightening of the screws should be carried out by adjusting the torque wrench to the stability torque with repeated tightening until stability torque has been achieved.

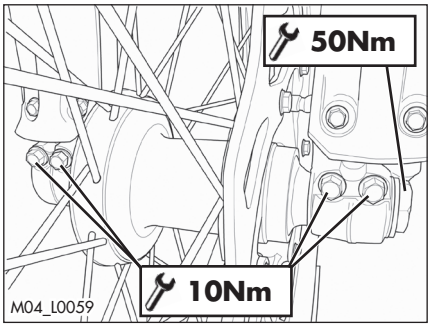

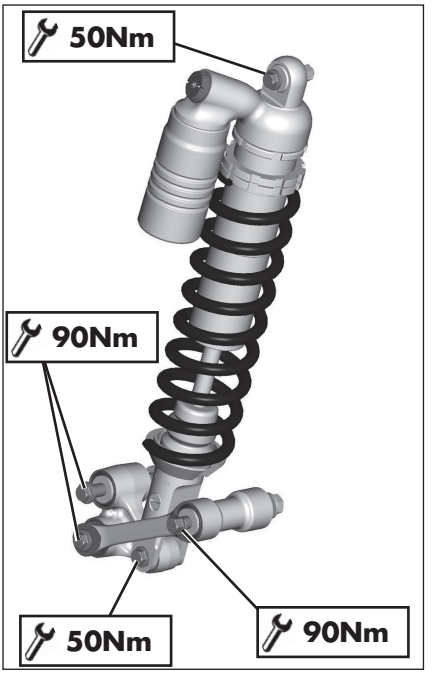

REAR SUSPENSION LEVERAGE

In order to guarantee optimal operation and duration over time of the progressive leverage of the rear suspension, it is recommended to periodically check correct tightness of nuts and bolts.

Verify that suspension nuts and bolts are at the indicated torque.

TYRES

Only fit tyres approved by BETAMOTOR.
Unsuitable tyres can adversely affect the road holding of the vehicle.

- To protect your safety, immediately replace any damaged tyres.
- Slick tyres adversely affect the road holding of the vehicle, especially on wet roads and in off-road riding.
- Insufficient pressure results in abnormal wear and overheating of the tyres.
- The front and rear tyres must have the same tread design.
- Always measure the inflating pressures when the tyres are cold.
- Keep the tyre pressures within the prescribed range.

CHAIN

Checking the drive chain periodically to ensure longer chain life. Always keep it lubricated and clean of deposited dirt.

Take special care in preventing the lubricant from coming into contact with the rear tyre or brake disc, otherwise the tyre grip and the action of the brake would be greatly reduced, making it very difficult to control the vehicle.

CHECK AND ADJUST TIGHTENING CHAIN

Position the drive on a flat base ensuring stability.

If the chain play exceeds 35 mm tension the chain.

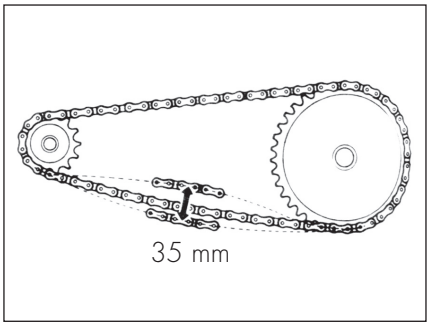

- Loosen the pin **1**.

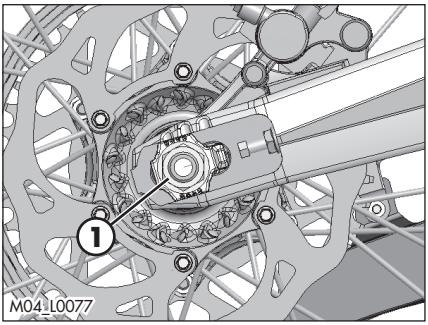

- Loosen counternuts **A** on either side of the fork.
- Turn adjusting screws **B** on either side until the desired chain tension is obtained.
- Tighten counternuts **A** on either side of the fork.

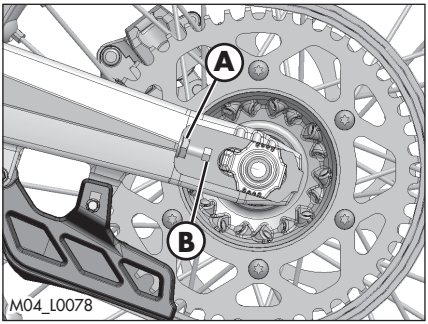

- Tighten the pin **1** to the torque indicated.

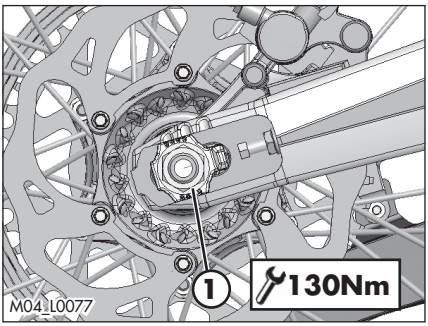

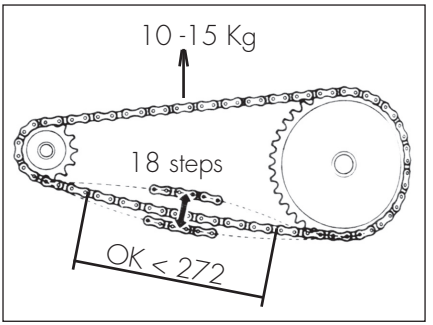

CHECK FOR CHAIN WEAR

Shift into neutral, pull up the upper stretch of the chain with a force of 10 - 15 kg (see figure). Measure the length of 18 links on the lower stretch of the chain. If the length is ≥ 272 mm, replace the chain. Chains do not always wear evenly. For this reason it is important that the measurement is taken at different points along the chain.

When fitting a new chain, be sure to replace the chainring and sprocket as well. New chains wear more quickly if fitted on old and worn sprockets. After replacing the chain, adjust its tension as described on page 61.

WARNING:
Check that no chain lubricant is present on the wheels or brakes. If present, remove it carefully.

HEADLIGHT

Keep the headlight glass clean at all times (see page 67).

Periodically check the correct angle of the light beam (page 38).

The LED headlight is sealed. In the case of burnout of one or more LEDs it is necessary to replace the entire group.

To replace, contact authorised Betamotor customer service.

TAIL LIGHT

Keep the tail light glass clean at all times (see page 67).

The LED tail light is sealed. In the case of burnout of one or more LEDs it is necessary to replace the entire group.

To replace, contact authorised Betamotor customer service.

BLINKERS

To reach the bulb, remove the glass cover by loosening screw.
Remove the bulb from the lamp holder and replace.

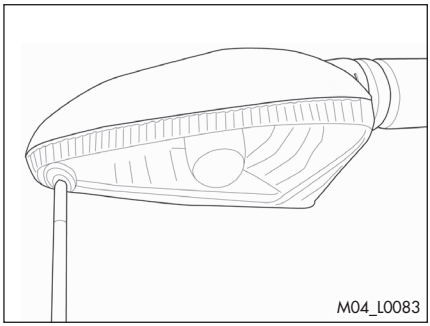

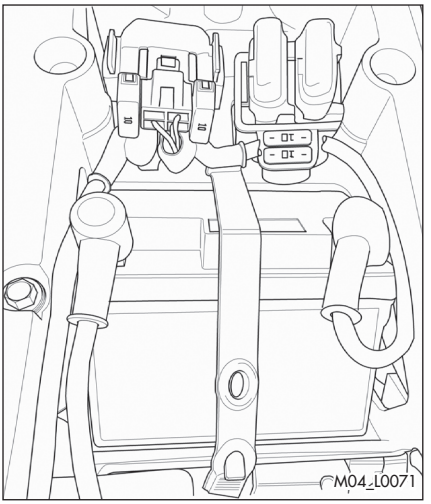

BATTERY

Battery is located under the saddle and requires no maintenance.

Keep the battery terminals clean. If necessary, protect them with a thin film of acid-free grease.

WARNING:
The battery contains hazardous substances:
- Keep the batterie out of the reach of children.

WARNING:
Batteries contain environmentally hazardous materials, dispose of the used batteries at a local collection point.

- Keep sparks and open flames away from the battery.

- Charge the battery only in well-ventilated areas, keeping it away from flammable materials. Use only chargers suitable for charging lithium-ion batteries.

- Do not attempt to charge fully exhausted batteries with a voltage lower than the minimum 9V. In this case, dispose of the battery according to applicable regulations.

- Do not remove the protections.

- When installing the battery, be sure to observe the polarity of the terminals.

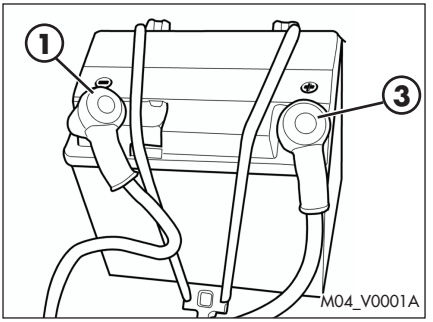

BATTERY REMOVAL

Shut off all electrical users and stop the engine.
Remove the saddle (page 77).

FIRST remove the cap **1** of the negative pole and disconnect the negative lug **2** (black) from the negative pole.

THEN remove the cap of the positive pole **3** and disconnect the positive lug **4** (red) from the positive pole (+).

Release the rubber band **5**.

Remove the battery.

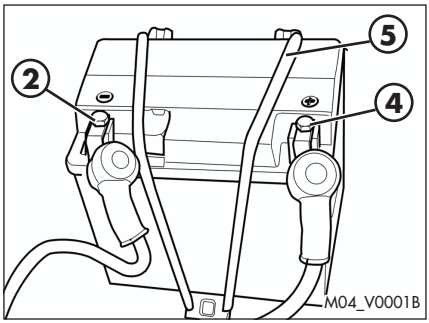

BATTERY ASSEMBLY

When fitting the battery, insert it with the terminals as shown in picture.

Reattach the rubber band **5**.

FIRST Connect the positive lug **4** (red) to the positive pole (+) of the battery by pushing the protective cap **3** in its position.

THEN secure the negative lug **2** (black) to the negative pole (-) of the battery by bringing the relative protective cap **1** in position.

Refit the saddle (page 77).

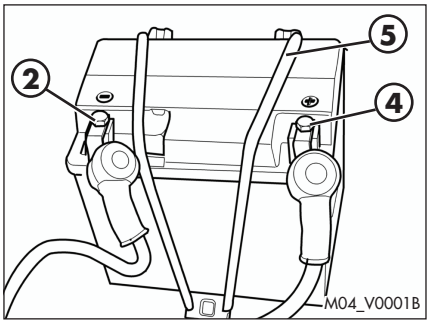

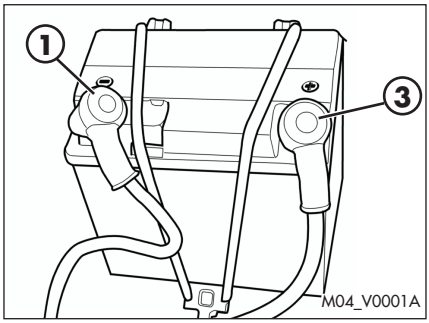

INACTIVITY

If the vehicle is not going to be used for a long time:
- remove the battery (page 64)
- charge with an adequate charger (page 66)
- store the battery in a dry place. The ideal temperature for storing the lithium-ion battery is 20°C.

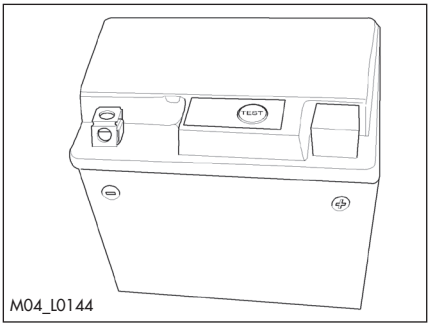

CHARGING THE BATTERY

Check the battery charge using a multimeter or by pressing the "TEST" button on the battery (if it is present)
- Voltage < 9V or "LOW":
- Do NOT charge the battery
- Replace the battery with a new equivalent one

- Voltage <12.4V or "MED":
- Charge the battery

Guidelines to charge the battery:
⚠ Use ONLY chargers suitable for charging lithium-ion batteries.

Maximum charging voltage: 14.4V
Maximum charging current: 3.0A
Maximum charge time:12h
Recharge the battery regularly with a specific battery charger when the vehicle is not used for more than 6 months
Ideal temperature for charging lithium ion batteries: 20 °C.

FUSES

To access the fuse, remove the saddle (page 76).

Fuse **1**: in the event of a blown fuse, the services listed in the table are not operational:

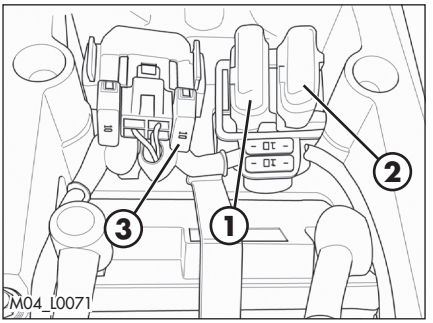

Rear lights
Stop
Front lights
Tachometer and control lights
Turn lights
Klaxon
Electric fan (optional)

Fuse **2**: in the event of a blown fuse, the vehicle stops/does not start.

Fuse **3**: in the event of a blown fuse, the vehicle does not start/stops.

Three spare fuses comes with the kit accompanying the vehicle.

A blown fuse should only be replaced with another of the same type.
Should the new fuse also burn out when fitted, immediately contact a specialized BETAMOTOR dealer.

CLEANING THE VEHICLE

GENERAL PRECAUTIONS

WARNING: Do not clean your vehicle with a high-pressure device with a strong jet of water. Excessive pressure can reach electrical components, connectors, flexible cables, bearings, etc and can damage or destroy them.

WARNING: Wash motorbikes frequently with cold water that are used near the sea (salty air) and on roads subject to salt spreading in winter. Cover with a film of oil or silicone spray unpainted parts and the most exposed parts such as wheels, forks and swingarm. Do not treat rubber parts and brakes.

When cleaning, avoid direct exposure to sunlight.

Close off the exhaust system to prevent water from entering.

Avoid directing the jet of water onto the air filter box cover and the throttle body.

WASHING MODE

Use water jet to soften the dirt and mud accumulated on the paintwork, then remove them with a soft bodywork sponge soaked in water and shampoo. Subsequently rinse well with water, and dry with air and cloth or suede leather.

Detergents pollute water. Always wash the vehicle in areas equipped for collection and purification of the washing liquids.

AFTER WASHING

Proceed to the emptying of the filter box using the appropriate ventilation and drying.

After cleaning, ride a short distance until the engine reaches operating temperature.

WARNING: braking effect is reduced with wet brakes. Operate the brakes cautiously to allow them to dry.

Push back the handlebar control covers, so that water can evaporate.

When the bike is completely dry and cooled down, lubricate all moving parts.

Treat all plastic and painted components with non-aggressive detergents or products that are specific for the care of the motorcycle.

To prevent malfunction of the electrical system, treat electric contacts and switches with electrical contact spray.

ATTENTION: any oxidation of electrical contacts may result in serious malfunctioning to the power supply system.

Specifically, treat the battery poles as described on page 64 and pay particular attention to what is contained here below.

ELECTRICAL CONNECTOR MAINTENANCE

Disconnect the connectors listed below, blow compressed air on the connector both on the system and on the component side, and treat electrical contacts and switches with spray for electrical contacts.

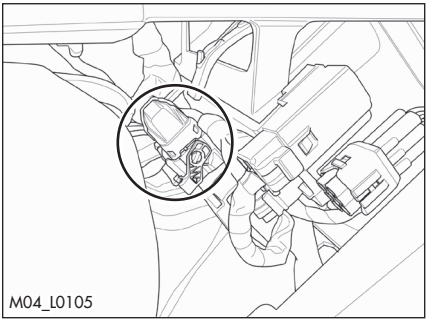
M04_L0105

CONTROL UNIT CONNECTOR

To access the control unit connector it is necessary to remove the rear mudguard (page 78).

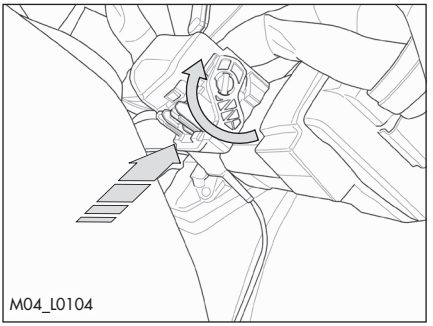
M04_L0104

Then:
- press the lock device;
- rotate the safety device as shown;
- remove the connector;

For re-assembly, proceed opposite the above-mentioned order.

AIR PRESSURE AND TEMPERATURE SENSOR

Remove the tank (page 81).

The connector is positioned as indicated in figure.

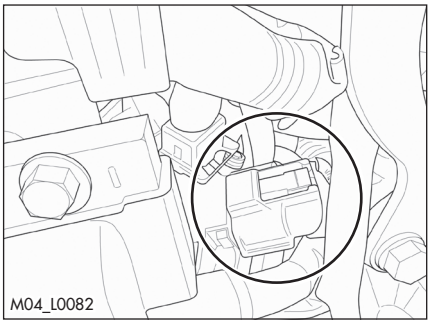

1) press the lock device;
2) Pull the connector as shown.

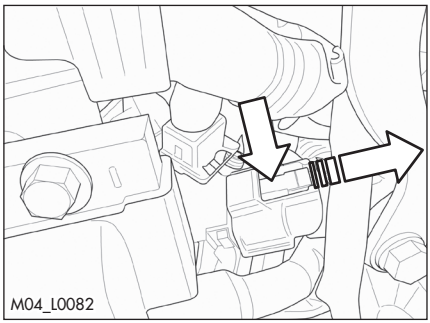

For re-assembly, proceed opposite the above-mentioned order.
Attention: at the end of the operation ensure that the connector is blocked.

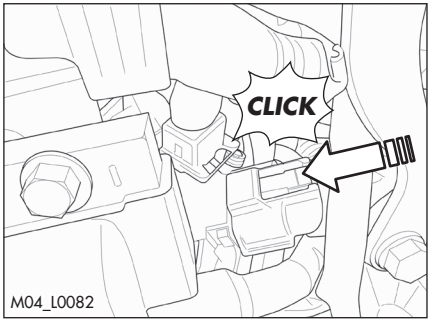

PROLONGED INACTIVITY

A few simple operations should be performed to keep the vehicle in good condition whenever it is to remain inactive for a long period (e.g. during the winter):

- Thoroughly clean the vehicle.
- Reduce the tyre pressures by approximately 30 percent, and if possible raise the tyres off the ground.
- Cover the unpainted parts, excepting the brakes and the rubber parts, with a film of oil or spray silicone.
- Remove the battery (page 64), and follow the instructions for inactivity (page 65) and recharging (page 66).
- Protect the vehicle with a dust cover.

AFTER PROLONGED INACTIVITY

- Reinstall the battery.
- Restore the tyre inflating pressures.
- Check the tightening of all the screws having an important mechanical function.

SCHEDULED MAINTENANCE VEHICLE

WARNING! After the first 100 Km (60 miles) of riding check the tightening of the following safety parts:

- Rear sprocket
- Brake discs
- Brake calipers
- Pinion
- Brake pedal

Key

C **Check** (Clean, adjust, lubricate, replace as necessary)
S **Replace/renew**
R **Adjust**
P **Clean**
T **Tighten**

		On Road usage only			On/Off Road usage		
		After 100 km (60 mi)	Every 2000 km (1240 mi)	Every 6000 km (3720 mi)	After 100 km (60 mi) Or after 3 hours	Every 2000 km (1240 mi) or every 30 hours	Every 6000 km (3720 mi) or every 90 hours
Engine	Engine oil	S	S	S	S	S	S
	Paper filter oil	S	S	S	S	S	S
	Wire netting filter oil	P	P	P	P	P	P
	Gear and clutch oil	S	S	S	S	S	S
	Engine clamping screws	C	C	C	C	C	C
	Head screws	T			T		
	Kick start and gearchange lever screws	C	C	C	C	C	C
	Spark plug cap	P	P	S	P	P	S
	Spark plug			S			S
	Breather pipe	C	C	C	C	C	C
	Countershaft bearings						S
	Crankshaft bearings						S
	Connecting rod						S
	Piston and segments						S
	Cylinder						C
	Surface appearance of the cams						C
	Valve clearance	C	C	C	C	C	C
	Valves			C			C
	Valve guide wear			C			C
	Valve spring			C			C
	Clutch disc wear		C	S		C	S
	Clutch springs		C	S		C	S
	Clutch hub - basket wear		C	S		C	S
	Gearbox bearing (crankcase side)			S			S
	Surface appearance of the gearbox			C			C
	Water pump seals			S			S
	Oil pump control gears			C			S

The required engine maintenance is strongly depending on the level of use and on the accordingly done periodic checks and service.
Follow the specified maintenance program for **On Road usage only** or **On/Off Road usage**.
Please always refer to **On/Off Road usage** maintenance if riding at wide open throttle or in heavy condition like sand, mud or dust because such condition exposes the engine to high mechanical and thermal stress.

		After 100 km (60 mi)	Every 2000 km (1240 mi)	Every 6000 km (3720 mi)	After 100 km (60 mi) Or after 3 hours	Every 2000 km (1240 mi) or every 30 hours	Every 6000 km (3720 mi) or every 90 hours
		On Road usage only			On/Off Road usage		
Assembling groups	Coolant system tightness and coolant level	C	C	C	C	C	C
	Exhaust manifold tightness	C	C	C	C	C	C
	Drives sliding and regulation	C	C	C	C	C	C
	Liquid level clutch pump	C	C	C	C	C	C
	Airbox and air filter	P	P	P	P	P	P
	Chain, plate wheel and pinion	C	C	C	C	C	C
Brake	Liquid level, pads thickness	C	C	C	C	C	C
	Disc thickness	C	C	C	C	C	C
	Pipe tightness	C	C	C	C	C	C
	Idle travel levers and drives sliding	C	C	C	C	C	C
Cycling	Shock absorber and telescopic fork tightness	C	C	C	C	C	C
	Rear suspension linkage	C	C	C	C	C	C
	Dust seal	C	C	C	C	C	C
	Fuel lines	C	C	C	C	C	C
	Bearings of stearing	C	C	C	C	C	C
	Bolts	T	T	T	T	T	T
Wheels	Wheel spokes and rim coaxiality	C	C	C	C	C	C
	Tyres (wear and pressure)	C	C	C	C	C	C
	Bearings clearance	C	C	C	C	C	C

Key

C **Check** (Clean, adjust, lubricate, replace as necessary)
S **Replace/renew**
R **Adjust**
P **Clean**
T **Tighten**

WARNING:
For any service requirements, please contact Betamotor's Authorized Service Network.

TIGHTENING TORQUE OVERVIEW

Here below is an overview of the tightening torque of all pieces subject to adjustment or maintenance:

Forecarriage		
	Tightening torque [Nm]	Threadlock
Wheel pin	50	
Fork foots - wheel pin	10*	
Brake caliper - Fork	35	M
U-bolt fork tube protection	1,5	
Steering head base - fork legs	12*	
Steering head - fork legs	17*	
Stem pin on steering head	20	
Lower handlebar u-bolt - steering head	40	M
Upper handlebar u-bolt - lower handlebar u-bolt	25	

Rear axle		
	Tightening torque [Nm]	Threadlock
Wheel pin	130	
Rear shock absorber - frame	50	
Rear shock absorber - rocker arm	50	
Connecting rod - frame	90	
Connecting rod - rocker arm	90	
Rocker arm - swinging arm	90	

Engine		
	Tightening torque [Nm]	Threadlock
Engine oil drain plug	15	
Paper oil filter plug	10	
Gearbox oil drain plug	20	

M Medium strength threadlock

* WARNING:
Tightening of the screws should be carried out by adjusting the torque wrench to the stability torque with repeated tightening until stability torque has been achieved.

Fairings		
	Tightening torque [Nm]	Notes
Fuel tank to the frame	10	Grease
Fuel tank fairings to the radiator	7	
Rear mudguard	5	M6
	20	M8
License plate	5	M6
	1,8	Self tapping
Rear frame to frame	35	Medium strength threadlocker
Filter box arms to the frame	35	Medium strength threadlocker
Engine protection	7	

CHAPTER 5 REMOVING AND INSTALLING SUPERSTRUCTURES

CONTENTS

Removing and installing of the saddle.....76
Removing and installing air filter cover panel.....77
Removing and installing of the rear mudguard.....78
Removing and installing of the engine protection.....80
Removing and installing of the tank.....81

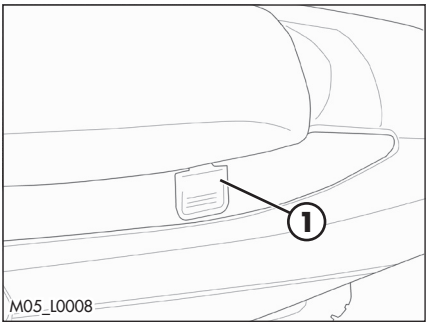

REMOVING AND INSTALLING OF THE SADDLE

Press button **1**.

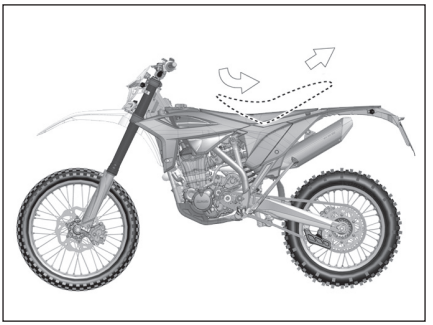

Remove the saddle towards the rear of the motorcycle.

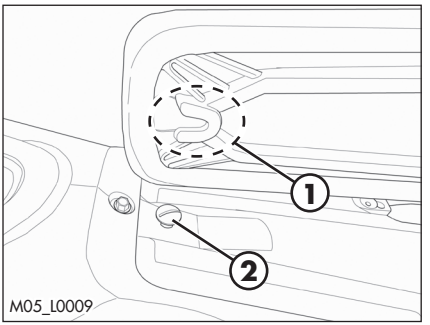

To re-assemble:
Insert the cavity **1** of the saddle in slot **2**.

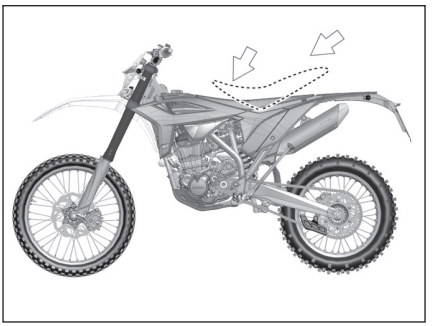

Press the saddle down in the middle and at the same time, push it forwards until the bayonet joint engages in its seat.

WARNING
Make sure the bayonet joint **3** is firmly inserted into the button lock.

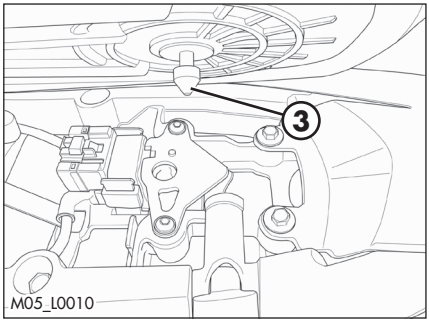

REMOVING AND INSTALLING AIR FILTER COVER PANEL

Grab the side panel in the front side and pull out.

To refit insert the tabs **1** into their slots.

Slide the side panel toward the vehicle.

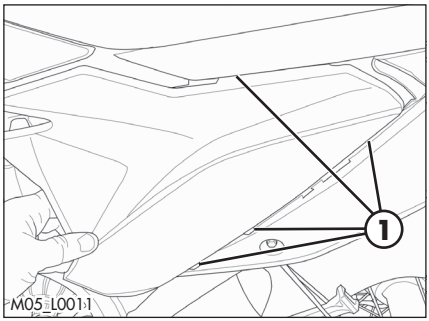

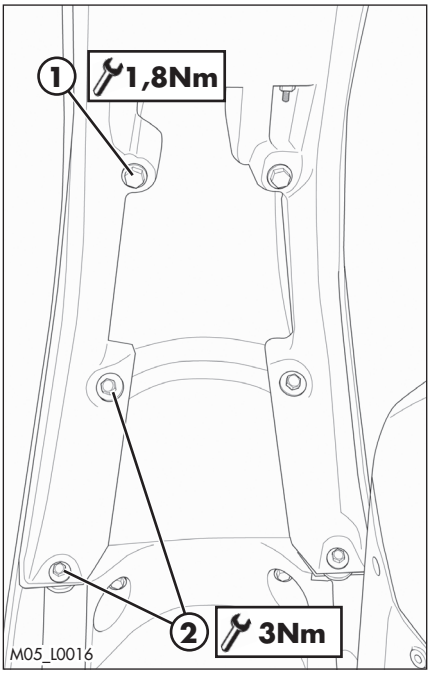

REMOVING AND INSTALLING OF THE REAR MUDGUARD

To remove the rear fender is necessary:

- remove the saddle (page 76);
- remove the screws **1** and **2** fixing the license plate holder to the vehicle;

Remove the saddle towards the rear of the motorcycle.

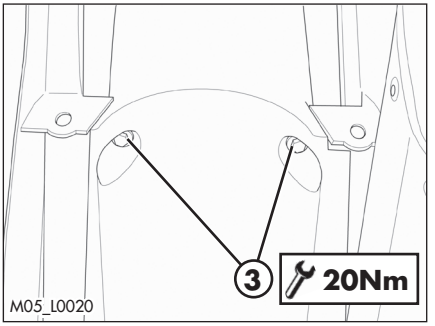

Remove the screws **3**, **4** and **5** (one for each side) fixing the mudguard to the vehicle.

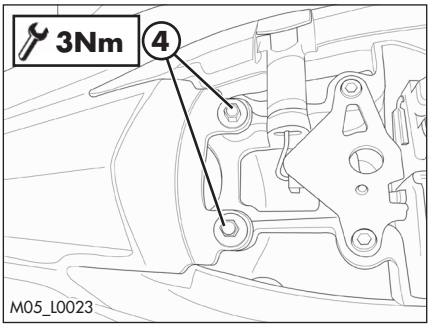

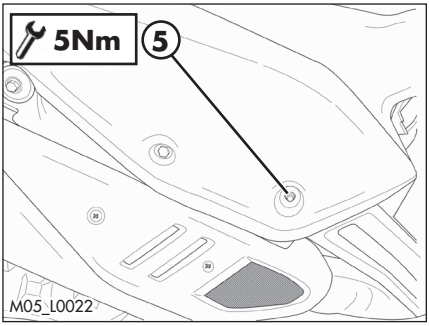

Grasp the mudguard by the sides, spread the fender and slide out towards the rear.

For reassembly, proceed inversely compared to the previously-described disassembly procedures. Refer to the tightening torques, where indicated.

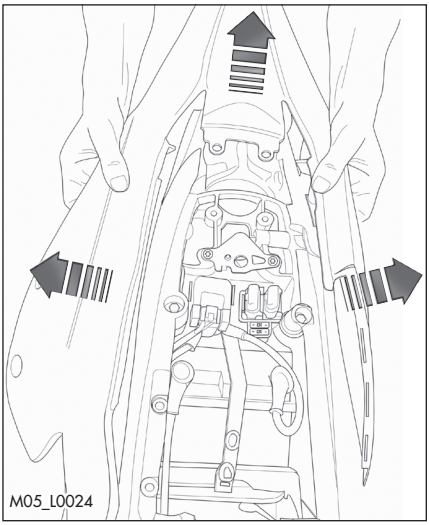

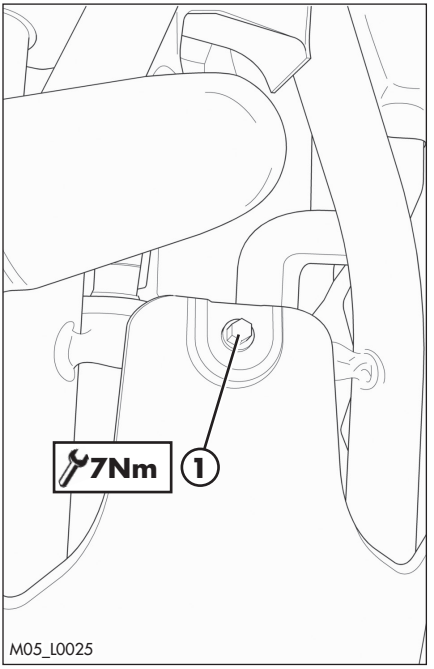

REMOVING AND INSTALLING OF THE ENGINE PROTECTION

To remove the engine protection plate, loosen the screws **1** and **2**.

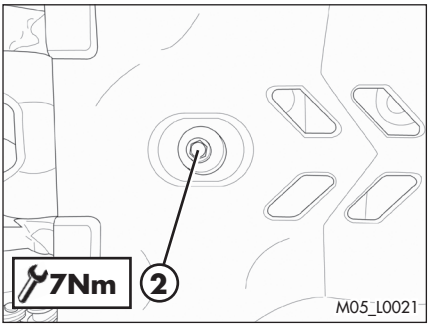

For reassembly, proceed inversely compared to the previously-described disassembly procedures.

Tighten the screws to the specified torque.

REMOVING AND INSTALLING OF THE TANK

Disconnect the fuel tank vent pipe.

Disconnect the fuel hose **1** by pressing the appropriate button of the quick coupling.

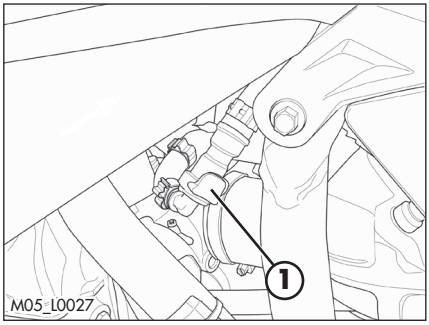

WARNING:
Follow action on a cold engine and in a well ventilated area.

WARNING:
Fire hazard. Fuel is highly flammable.

Always stop the engine when refuelling and keep open flames and lighted cigarettes away.

Immediately clean up any spilled fuel.

Remove the saddle (page 76).

Remove the screw **2** fastening the tank to the frame and the screws **3** (one per side) securing the fairing to the radiator.

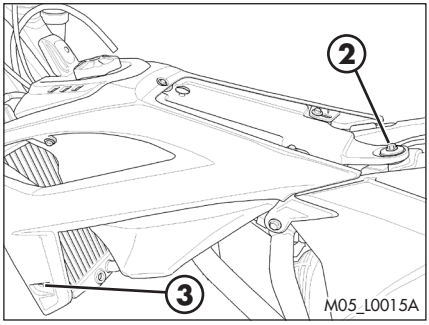

Disconnect the electrical connectors **4** and **5**.

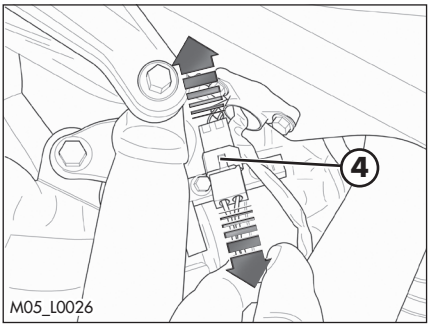

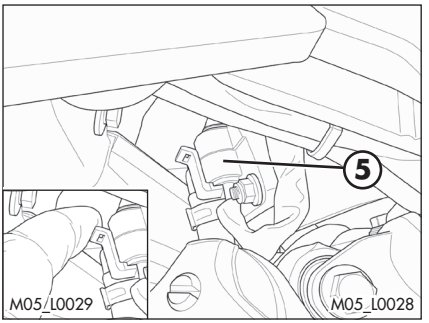

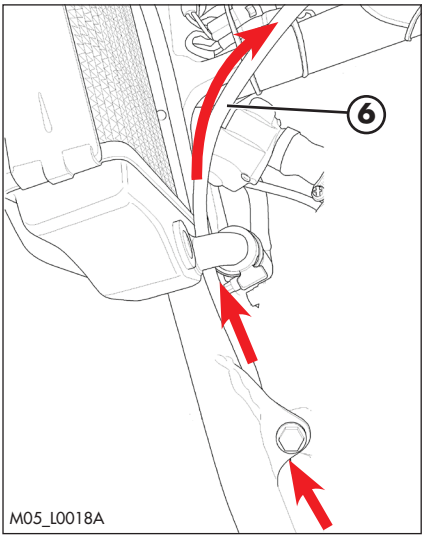

Lift the tank slightly and:
- remove the tube **6**.

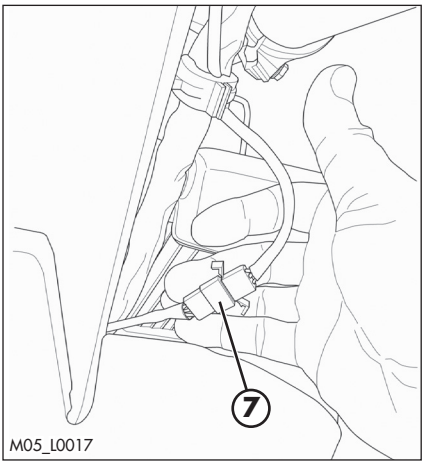

- disconnect the connector **7**.

Lift the tank backwards and remove the tank towards the rear.

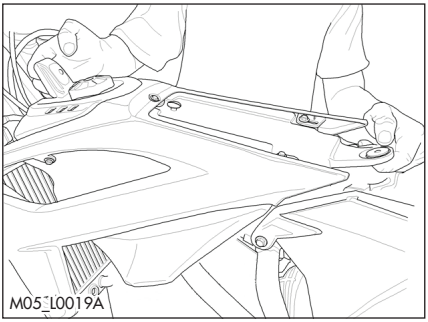

To refit the tank proceed as follows:

- place the tank to the vehicle and connect the connector **7**.

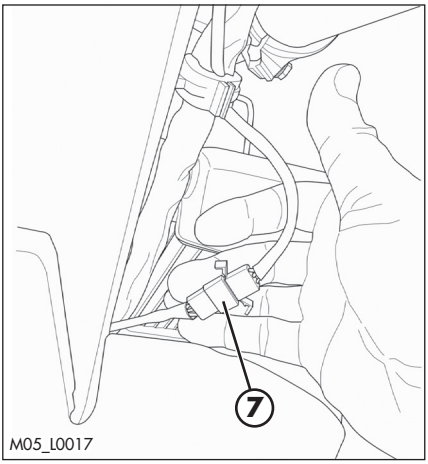

Insert the hose **6** following the passage as shown in figure.

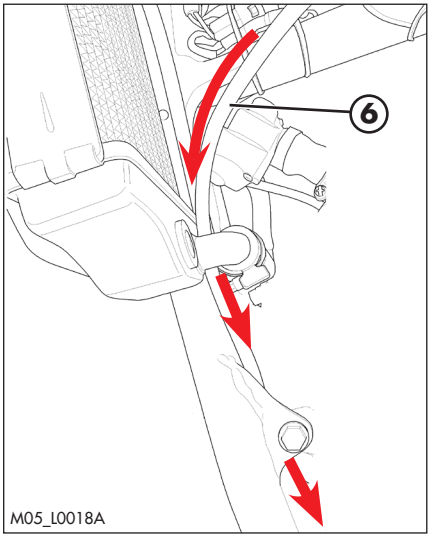

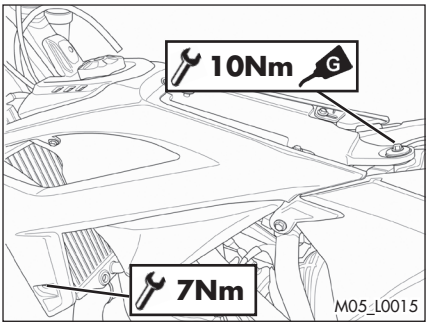

Push the tank towards the front of the vehicle and down.

Tighten the tank screws to the torques given.
When assembly is complete, lightly pull the tube **6** so that it is stretched correctly.

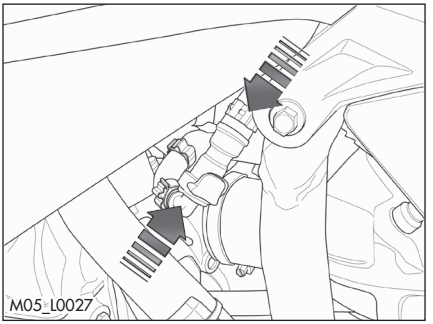

Connect the fuel connections by coupling them completely.

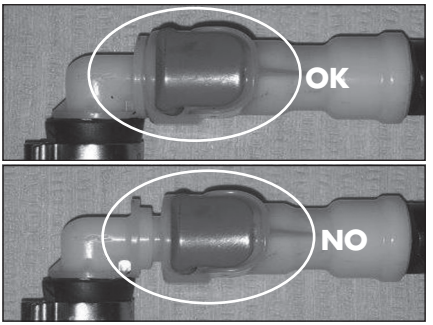

WARNING
For safety reason, the fuel flow is stopped when the connector is even partially engaged.
Make sure that the fuel quick release fittings are well inserted.

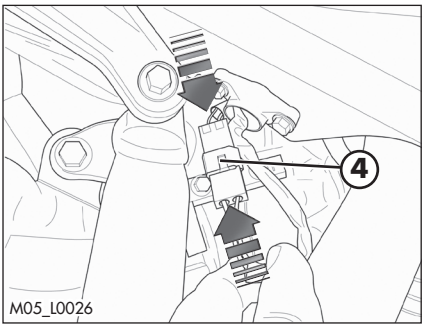

Reconnect connectors **4** and **5**.

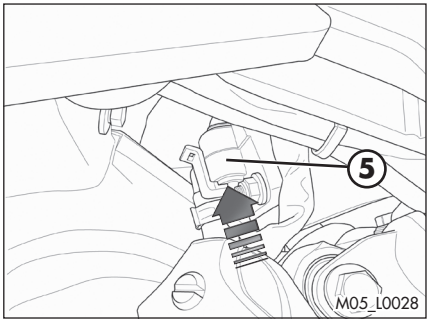

Refit the saddle (page 76) and the vent pipe.

5

CHAPTER 6 TROUBLESHOOTING

CONTENTS

Troubleshooting 88
Alphebetical index 89

6 TROUBLESHOOTING

PROBLEM	CAUSE	REMEDY
The engine starts but the telltale lights on	Engine management system fault	Contact authorised BETAMOTOR customer service
The electric starter does not turn	Decompressor failure	Contact authorised BETAMOTOR customer service
	Flat battery	Check the battery
	Blown fuse	Replace
	Defective relay	Contact authorised BETAMOTOR customer service
	Defective starter motor	Contact authorised BETAMOTOR customer service
The engine rotates, but does not start	Fuel quick release fittings incorrectly inserted	Check that the fuel quick release fittings are properly inserted (page 81)
	Spark plug dirty	Clean or replace the spark plug
	Spark gap wrongly adjusted	Restore the spark gap
	Faulty ignition/injection system	Contact authorised BETAMOTOR customer service
The motor stops or splutters	Lack of fuel	Refuel
Engine overheats	Radiator grill blocked	Remove and clean the grill
	Radiator (air side) blocked	Clean the radiator
	Insufficient air flow	Check that the cooling fan is working correctly
	Silencer partly clogged	Contact authorised BETAMOTOR customer service
Front braking poor	Brake pads worn	Contact authorised BETAMOTOR customer service
	Air or humidity in the hydraulic circuit	Contact authorised BETAMOTOR customer service
Rear braking poor	Brake pads worn	Contact authorised BETAMOTOR customer service
	Air or humidity in the hydraulic circuit	Contact authorised BETAMOTOR customer service

ALPHABETICAL INDEX

Adjusting fork 33
Adjusting the headlight 38
Adjustment of gas clearance 31
Air filter 46

Battery 64
Blinkers 63
Brakes 30
Bulbs 15

Carbon canister maintenance 48
Chain 60
Check and adjusting of steering play 58
Checks before and after use 23
Cleaning the vehicle 67
Clutch 31
Clutch control 56

Electrical connector maintenance 68
Engine oil 40
Engine shut-down 25

Familiarizing with the vehicle 11
Fork 59
Front brake 50
Front wheel 59
Fuelling 24
Fuses 15
Fuses 66

Gearbox oil 42

Handlebar adjustment 31
Headlight 63

Idle adjustment 31

Key to symbols 30

Label location 10
Liquid coolant 43

Main parts 18
Moto-GPS "Voyager" (Trail Tech) 22

Operating instructions 5

Prolonged inactivity 70

Rear brake 53
Rear suspension leverage 60
Recommended lubricants and liquid 15
Removing and installing air filter cover panel 77
Removing and installing of the engine protection 80
Removing and installing of the rear mudguard 78
Removing and installing of the saddle 76
Removing and installing of the tank 81
Riding safety 6
Running in 23

Scheduled maintenance vehicle 71
Shock absorber 35
Spark arrestor service 47
Spark plug 49
Specifications 12
Starting the engine 25
Symbols 5

Tail light 63
Tightening torque overview 73
Tools kit 8
Troubleshooting 88
Tyres 60

Vehicle identification data 8
Vehicle preparation for use in heavy-duty conditions 26